CITY OF HEMET
PUBLIC WORKS DEPARTMENT

STANDARD DRAWINGS

CITY OF HEMET PUBLIC WORKS DEPARTMENT

STANDARD DRAWINGS

TABLE OF CONTENTS (Cont.)

STANDARD No.	DRAINAGE DETAILS
D-300	CATCH BASIN No. 1
D-300A	CATCH BASIN NOTES
D-300B	CATCH BASIN REINFORCEMENT
D-301	***[NOT USED]***
D-302	CURB SUPPORT DETAIL
D-303	STORM DRAIN CLEANOUT
D-304	LOCAL DEPRESSION
D-304A	LOCAL DEPRESSION
D-305	STORM DRAIN MANHOLE FRAME AND COVER
D-305A	NOTES - ***STORM DRAIN MANHOLES FRAME & COVER***
D-306	CURB OUTLET (WITH STEEL PLATE)
D-307	CURB OUTLET (WITH CONCRETE SLAB)
D-308	SIDEWALK DRAINAGE OUTLET THROUGH CURB
D-308A	NOTES
D-309	MINOR SIDEWALK ***DRAINAGE*** OUTLET
D-310	YARD DRAIN THROUGH CURB
D-311	CONCRETE LUG
D-312	CONCRETE PIPE COLLAR FOR PIPES 12" TO 66"
D-313	CONNECTION TO CURB INLET PIPES 12" TO ***72"***
D-313A	NOTES
D-314	CONCRETE PIPE SLOPE ANCHOR
D-314A	CONCRETE PIPE SLOPE ANCHOR
D-315	CHANNEL OR PIPE OUTLET
D-316	INLET APRON FOR CULVERTS UP TO 42" DIAMETER
D-316A	INLET APRON FOR CULVERTS UP TO 42" DIAMETER
D-317	TYPICAL ALLEY AND ALLEY APRON SECTION
D-318	DRAINAGE INLET
D-319	DETENTION BASIN SCHEMATICS

Text in ***BOLD ITALICS*** indicates 2011 revisions.

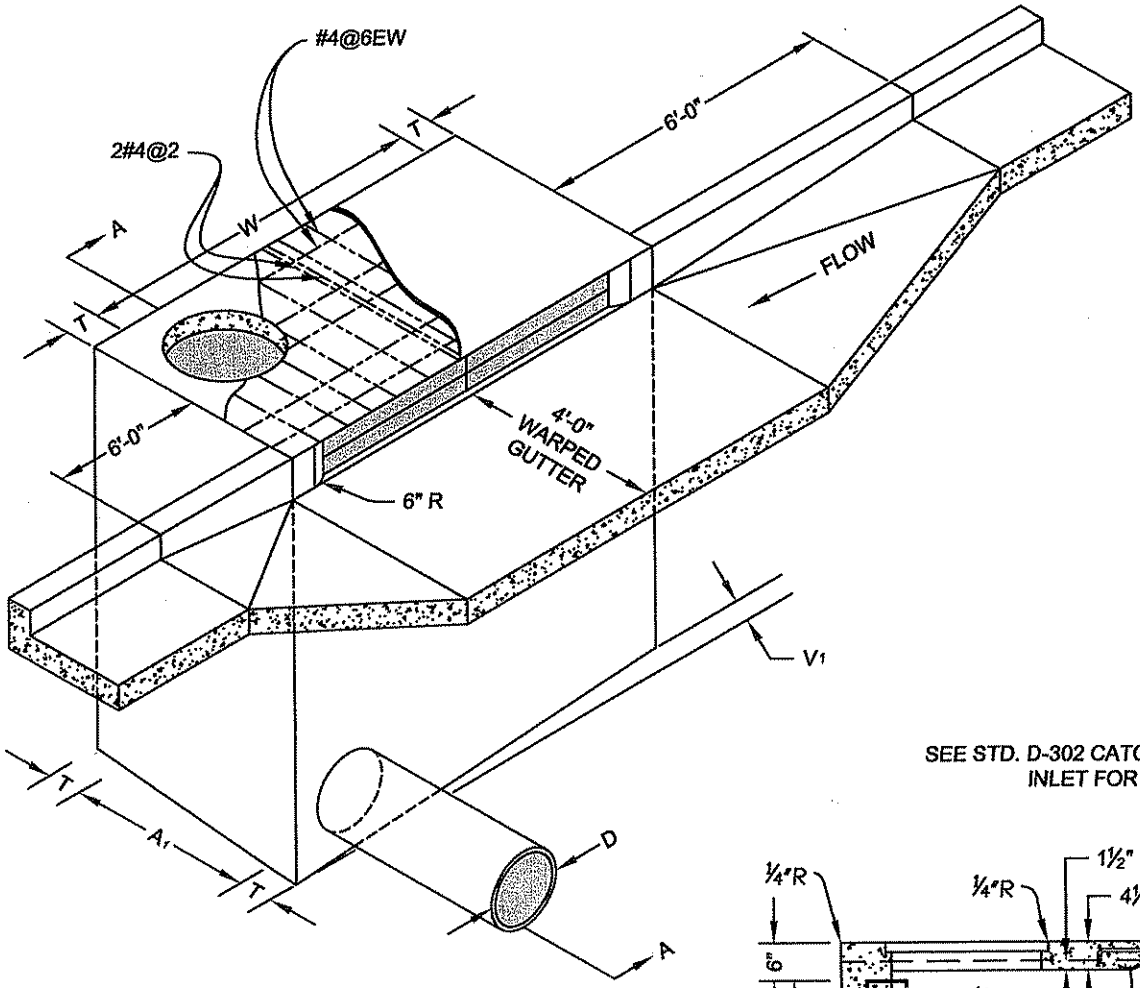

PERSPECTIVE OF CATCH BASIN NO. 1

SEE NOTES: STD. NO. D-300A
STD. NO. D-300B

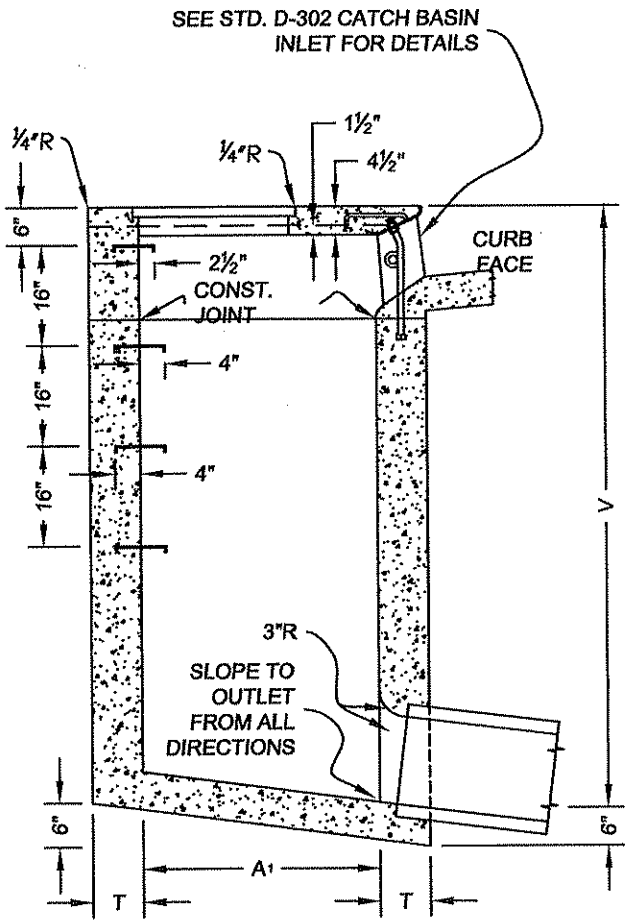

SECTION A-A

City of Hemet
PUBLIC WORKS DEPARTMENT
ENGINEERING DIVISION
510 E. FLORIDA AVENUE
HEMET, CA 92543
(951) 765-2360

CATCH BASIN NO. 1

MICHAEL A. GOW, PW DIRECTOR/CITY ENG. R.C.E. 54164 — MAR 2009 DATE

REVISIONS

N:\PW\4100\COH_STDS\REVISIONS\DRAINAGE\D-300.dwg N.Beltran 2009

1 OF 3 SHEETS

STANDARD NO. D-300

STORM DRAIN AND CATCH BASIN NOTES

1. DIMENSIONS: UNLESS OTHERWISE SPECIFIED
   V'=6" @ W=7', 9" @ W=14', 12" @ W=21'
   V =SHALL BE SHOWN ON THE PLANS.
   W=SHALL BE SHOWN ON THE PLANS (7 FOOT MINIMUM).
   T=6 INCHES IF V IS 4 FEET OR LESS.
   T=8 INCHES IF V IS LESS THAN 8 FEET.
   T=10 INCHES IF V IS 8 FEET OR MORE.
   D=18 INCHES UNLESS OTHERWISE SPECIFIED.
   A'=38 INCHES UNLESS OTHERWISE SPECIFIED.

2. STRUCTURAL CONCRETE SHALL BE CLASS "A" P.C.C. (6.0 SACK - 3250 PSI).

3. THE REINFORCING STEEL SHALL BE NUMBER 4 DEFORMED BARS. CLEARANCE SHALL BE 1½ INCH FROM THE BOTTOM OF THE SLAB. SEE NOTE 7.

4. THE SURFACE OF ALL EXPOSED CONCRETE SHALL CONFORM TO SLOPE, GRADE, COLOR, FINISH AND SCORING IN THE EXISTING OR PROPOSED CURB AND WALK ADJACENT TO THE BASIN. THE BASIN FLOOR SHALL BE GIVEN A TIGHT WOOD FINISH. CURVATURE OF THE LIP AND SIDEWALLS AT THE GUTTER OPENING SHALL NOT ME MADE BY PLASTERING. THE OUTLET PIPE SHALL BE TRIMMED TO FINAL SHAPE AND LENGTH BEFORE THE CONCRETE IS POURED.

5. STEPS:
   ¾ INCH PLAIN ROUND GALVANIZED STEEL STEPS SHALL BE INSTALLED 16 INCHES APART WHEN V EXCEEDS 4 FEET 6 INCHES. THE TOP STEP SHALL BE 6 INCHES BELOW THE TOP SURFACE AND SHALL BE 2½ INCHES CLEAR FROM THE WALL. ALL OTHER STEPS SHALL BE 4 INCHES CLEAR FROM THE WALL. ONLY ONE STEP 12 INCHES FROM THE BOTTOM SHALL BE INSTALLED IF V IS 4 FEET 6 INCHES OR LESS. ALL STEPS SHALL BE ANCHORED NOT LESS THAN 4 NCHES INTO THE WALL OF THE BASIN.

6. CURB, GUTTER AND LOCAL DEPRESSIONS SHALL BE CLASS "B" CONCRETE.

7. SPECIAL DESIGN WILL BE REQUIRED WHEN THE FOLLOWING CONDITIONS ARE EXCEEDED:

BASIN LENGTH=W	BASIN DEPTH=V
7'	UP TO 10'
14'	UP TO 7'
21'	UP TO 6'

8. GROUND BELOW CATCH BASIN FLOOR SHALL BE COMPACTED TO 90%.

9. STORM DRAIN TRENCH SUBGRADE SHALL BE COMPACTED TO 90%.

10. DRAIN SYSTEM SHALL BE CLEAN OF DIRT AND DEBRIS AND VIDEO PRIOR TO FINALL ACCEPTANCE.

City of Hemet
PUBLIC WORKS DEPARTMENT
ENGINEERING DIVISION
510 E. FLORIDA AVENUE
HEMET, CA 92543
(951) 765-2360

STORM DRAIN AND CATCH BASIN NOTES

JORGE L. BIAGIONI, PRINCIPAL ENGINEER R.C.E. 33751 — MAR 2011 DATE

REVISIONS

N:\PW4100\COH_STDS\REVISIONS\DRAINAGE\D-300A.dwg N.Beltran 2011

STANDARD NO. D-300A

W OF C.B.	V(FT.) FROM	V(FT.) TO (INCL)	T (IN)	FRONT WALL STEEL HOR.	FRONT WALL STEEL VERT.	REAR & END WALLS & FLOOR STEEL EACH WAY
TO 7'		4	6	#3@6"	#3@6"	#3@6"
TO 7'	4	8	8	#4@12"	#4@12"	#4@12"
TO 7'	8	12	10	#4@10"	#4@10"	#4@10"
14'		4	6	#3@6"	#3@6"	#3@6"
14'	4	8	8	#4@12"	#4@12"	#4@12"
14'	8	10	10	#4@8"	#4@12"	#4@10"
14'	10	12	10	#4@6"	#4@12"	#4@10"

WALL AND FLOOR STEEL

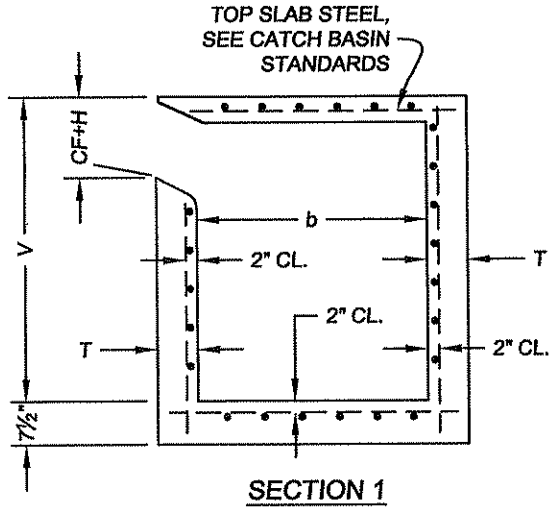

SECTION 1

CATCH BASIN REINFORCEMENT-"W" TO 14'(INCL.)

V(FT.) FROM	V(FT.) TO (INCL)	T (IN)	FRONT WALL STEEL BARS A & B	REAR WALL STEEL BARS C	REAR WALL STEEL BARS D	REAR WALL STEEL BARS E	END WALL STEEL HOR. & VERT.
	4	6	#3@24"	#3@12"	--	#4@24"	#3@18"
4	5	8	#3@20"	#3@12"	--	#4@24"	#3@14"
5	6	8	#3@12"	#3@10½"	--	#4@24"	#3@14"
6	7	8	#4@17"	#3@8½"	--	#4@24"	#3@14"
7	8	8	#4@13"	#3@6½"	--	#4@24"	#3@14"
8	9	10	#4@15"	#3@7½"	--	#4@20"	#3@11"
9	10	10	#4@12"	#4@12"	--	#4@20"	#3@11"
10	11	10	#5@15"	--	#4@11"	#4@18"	#3@11"
11	12	10	#6@18"	--	#4@9"	#4@13"	#3@11"
	X=(V+T)-(C.F.+H+4½")				Y=[(B+2T)/2]+15 DIA.-2"		

WALL AND FLOOR STEEL

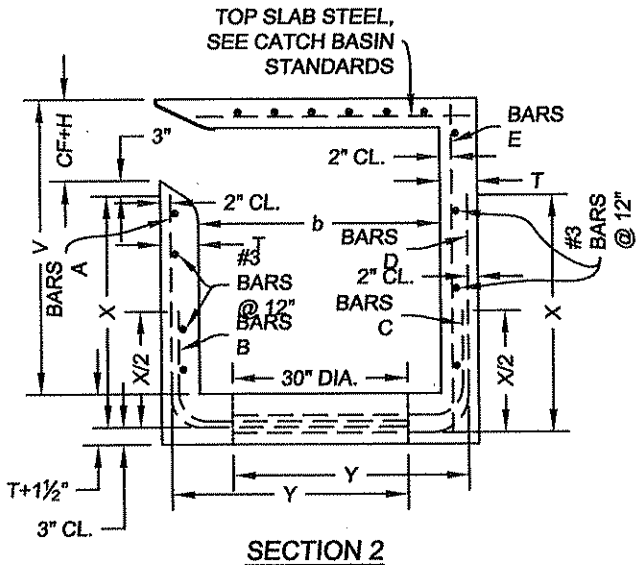

SECTION 2

CATCH BASIN REINFORCEMENT-"W" GREATER THAN 14'

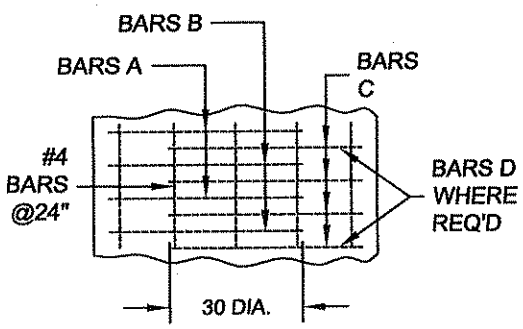

FLOOR REINFORCEMENT SECTION 2

NOTES:

1. WALL & REINFORCING SHOWN HEREON SHALL BE USED WITH CATCH BASIN STANDARD DRAWINGS.
2. REINFORCING STEEL SHOWN HEREON SHALL BE USED IN ALL CATCH BASINS ON STATE HIGHWAYS REGARDLESS OF BASIN LENGTH OR DEPTH.
3. OMIT WALL & FLOOR STEEL REINFORCING UNDER THE FOLLOWING CONDITIONS:

BASIN LENGTH=W	BASIN DEPTH=V
3.5'	ALL
7.0'	UP TO 10'
14.0'	UP TO 7'
21.0'	UP TO 6'

City of Hemet
PUBLIC WORKS DEPARTMENT
ENGINEERING DIVISION
510 E. FLORIDA AVENUE
HEMET, CA 92543
(951) 765-2360

CATCH BASIN REINFORCEMENT

MICHAEL A. GOW, PW DIRECTOR/CITY ENG. R.C.E. 54164 — MAR 2009 DATE

REVISIONS

N:\ PW\4100\COH_STDS\REVISIONS\DRAINAGE\D-300B.dwg N.Beltran 2009

3 OF 3 SHEETS

STANDARD NO. D-300B

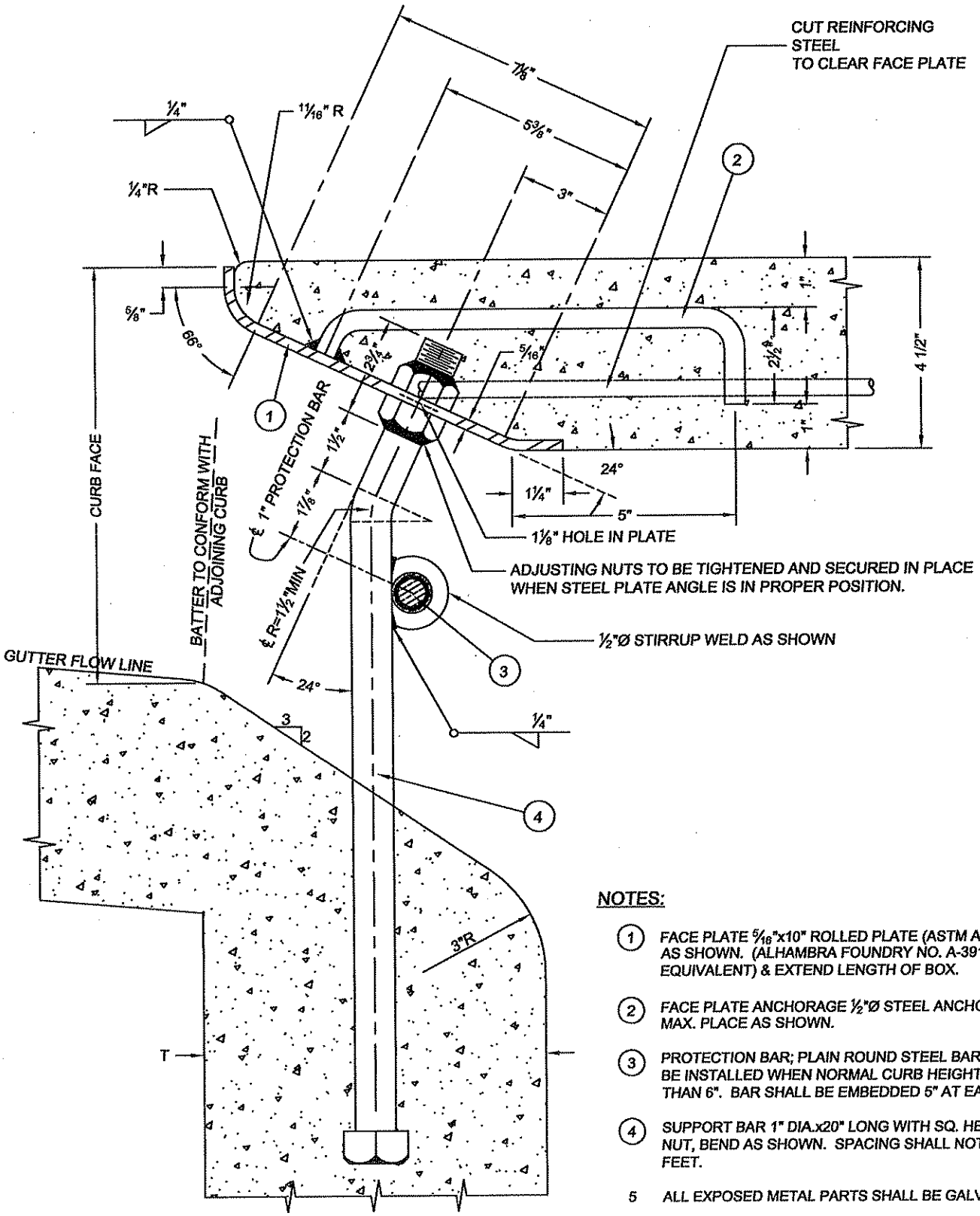

NOTES:

1. FACE PLATE 5/16"x10" ROLLED PLATE (ASTM A36) FORMED AS SHOWN. (ALHAMBRA FOUNDRY NO. A-3911 OR EQUIVALENT) & EXTEND LENGTH OF BOX.
2. FACE PLATE ANCHORAGE ½"Ø STEEL ANCHOR 42" OC MAX. PLACE AS SHOWN.
3. PROTECTION BAR; PLAIN ROUND STEEL BAR 1" DIA. SHALL BE INSTALLED WHEN NORMAL CURB HEIGHT IS GREATER THAN 6". BAR SHALL BE EMBEDDED 5" AT EACH END.
4. SUPPORT BAR 1" DIA.x20" LONG WITH SQ. HEAD AND HEX. NUT, BEND AS SHOWN. SPACING SHALL NOT EXCEED 4 FEET.
5. ALL EXPOSED METAL PARTS SHALL BE GALVANIZED.

City of Hemet
PUBLIC WORKS DEPARTMENT
ENGINEERING DIVISION
510 E. FLORIDA AVENUE
HEMET, CA 92543
(951) 765-2360

CURB SUPPORT DETAIL

JORGE L. BIAGIONI, PRINCIPAL ENGINEER R.C.E. 33751

MAR 2011
DATE

REVISIONS

N:\PW\4100\COH_STDS\REVISIONS\DRAINAGE\D-302.dwg N.Beltran 2011

1 OF 1 SHEETS

STANDARD NO. D-302

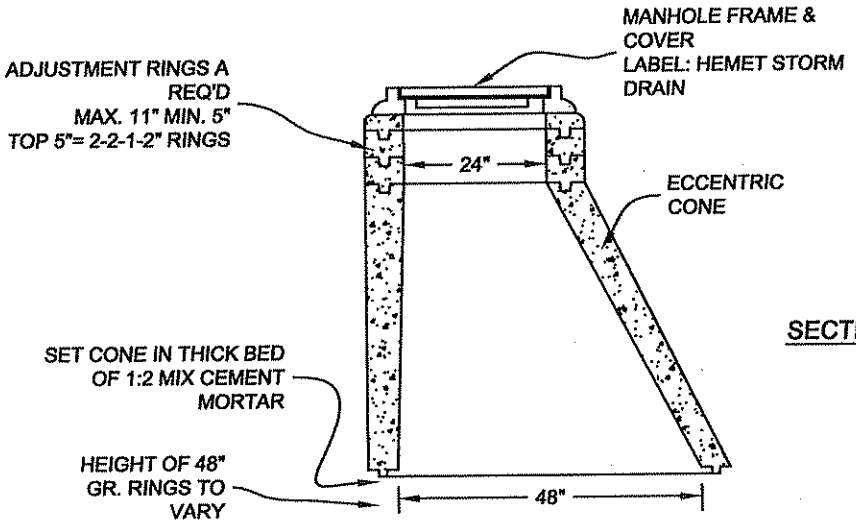

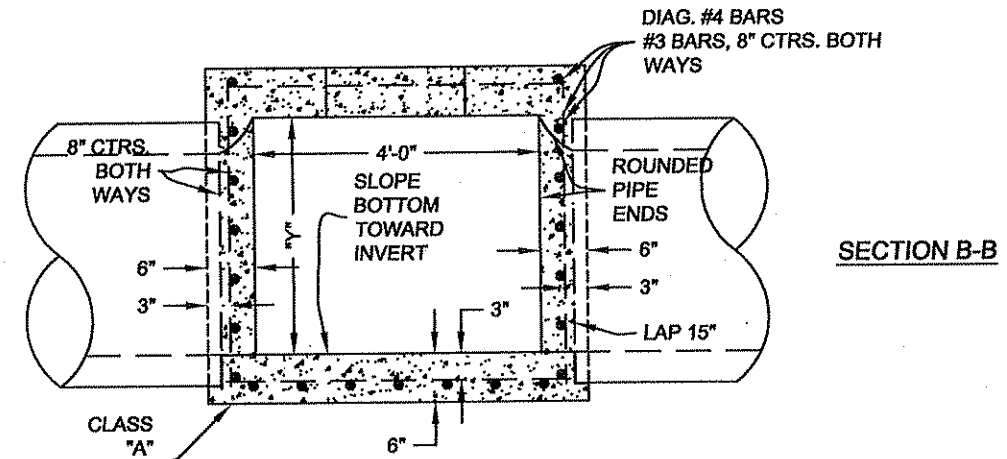

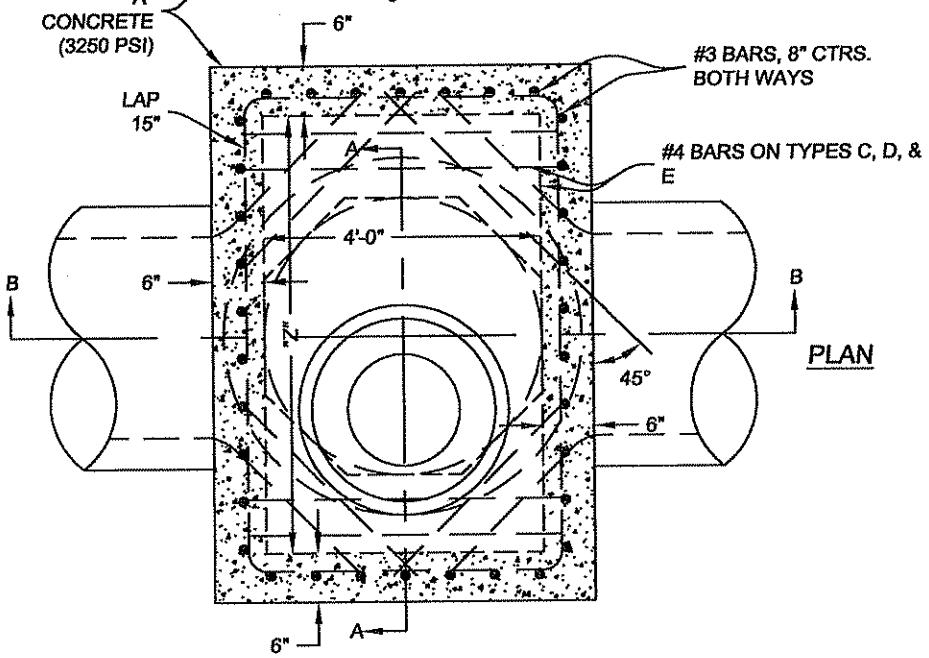

NOTE: GROUND BELOW STRUCTURE SHALL BE BROUGHT TO 90% RELATIVE COMPACTION.

City of Hemet
PUBLIC WORKS DEPARTMENT
ENGINEERING DIVISION
510 E. FLORIDA AVENUE
HEMET, CA 92543
(951) 765-2360

STORM DRAIN CLEANOUT

JORGE L. BIAGIONI, PRINCIPAL ENGINEER R.C.E. 33751

MAR 2011
DATE

REVISIONS

N:\ PW\4100\COH_STDS\REVISIONS\DRAINAGE\D-303..dwg N.Beltran 2011

1 OF 1 SHEETS

STANDARD NO. D-303

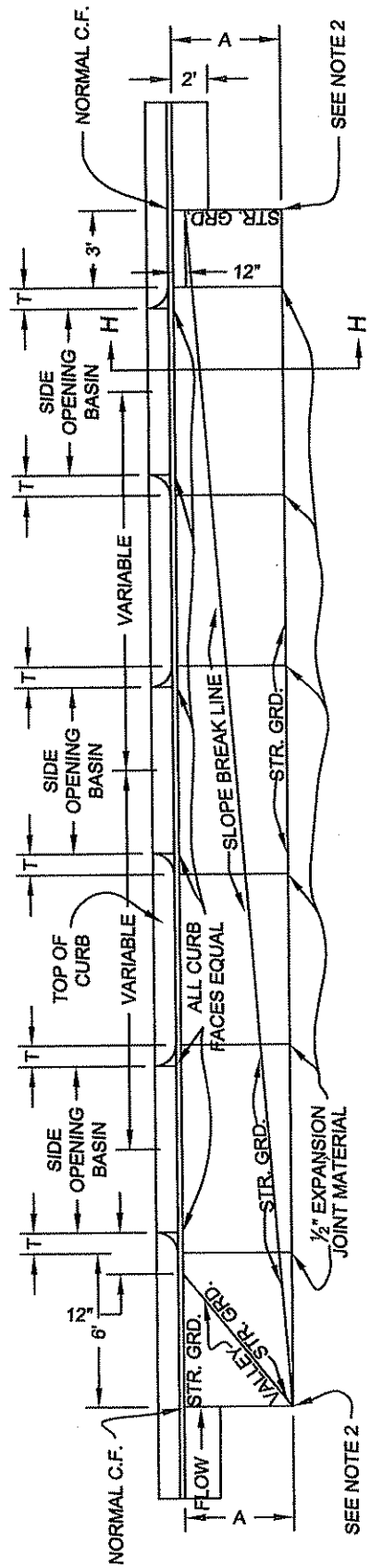

CASE A

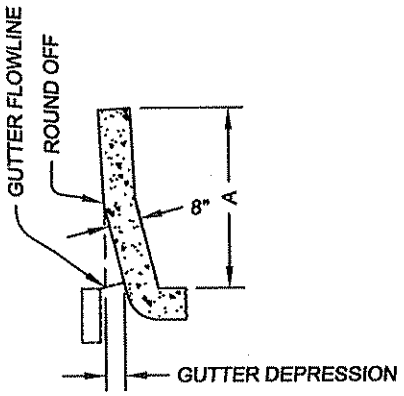

SECTION H-H

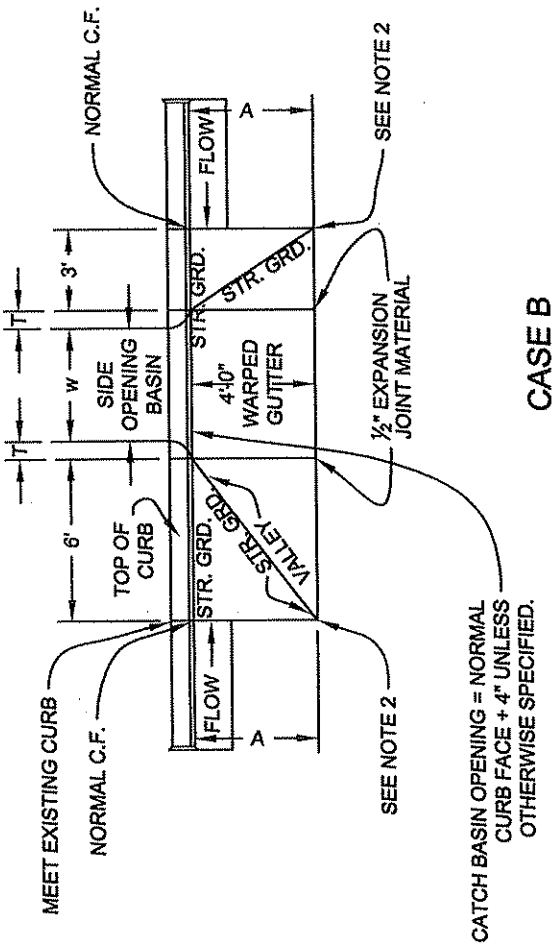

CASE B

City of Hemet
PUBLIC WORKS DEPARTMENT
ENGINEERING DIVISION
510 E. FLORIDA AVENUE
HEMET, CA 92543
(951) 765-2360

LOCAL DEPRESSION

MICHAEL A. GOW, PW DIRECTOR/CITY ENG. R.C.E. 54164 — MAR 2009 DATE

REVISIONS

N:\ PW\4100\COH_STDS\REVISIONS\DRAINAGE\D-304.dwg — N.Beltran 2009

1 OF 2 SHEETS

STANDARD NO. D-304

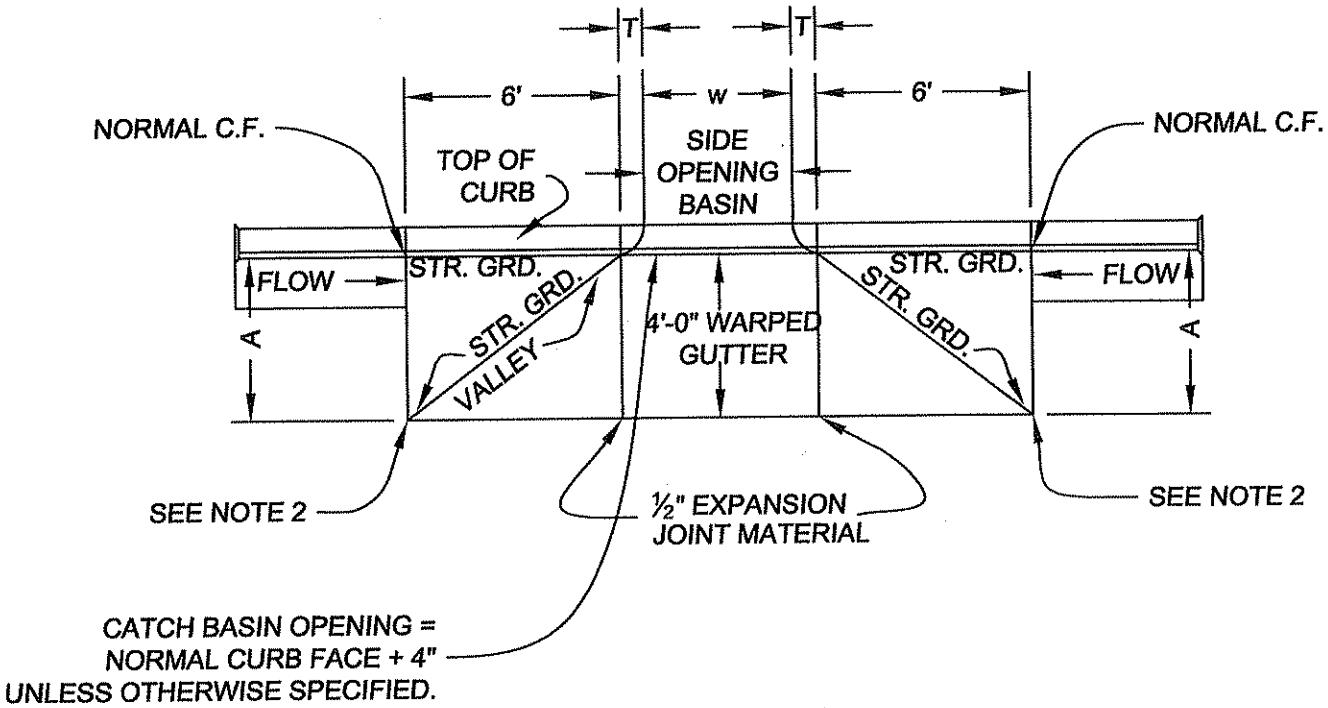

CASE C

NOTES:

1. LOCAL DEPRESSION SHALL BE CASE A UNLESS OTHERWISE SPECIFIED ON GENERAL PLAN.
2. ELEVATIONS AT OUTER CORNERS SHOWN ON GENERAL PLAN. IF NO ELEVATIONS ARE SPECIFIED, THE OUTER EDGE OF LOCAL DEPRESSION SHALL CONFORM TO FINISHED STREET SURFACE.
3. A=4' UNLESS OTHERWISE SPECIFIED.
   T=SEE STD. D-300A.
   W=SEE STD. D-300A.
4. DEPRESSION SHALL BE 6 SACK MIX. (3250 PSI)

City of Hemet
PUBLIC WORKS DEPARTMENT
ENGINEERING DIVISION
510 E. FLORIDA AVENUE
HEMET, CA 92543
(951) 765-2360

LOCAL DEPRESSION

MICHAEL A. GOW, PW DIRECTOR/CITY ENG. R.C.E. 54164 — MAR 2009 DATE

REVISIONS

N:\PW\4100\COH_STDS\REVISIONS\DRAINAGE\D-304A.dwg N.Beltran 2009

STANDARD NO. D-304A

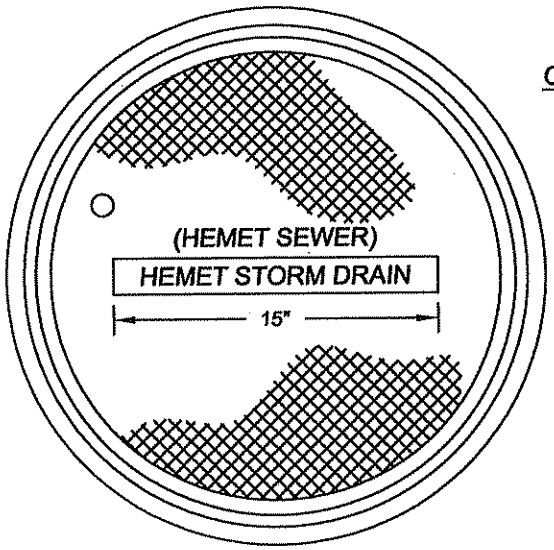

TOP VIEW

COVER DETAIL

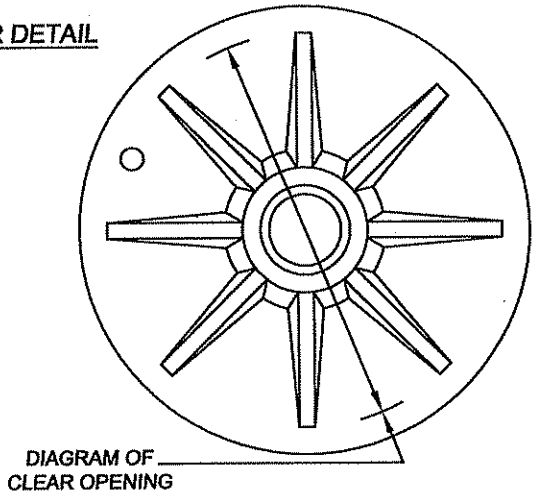

BOTTOM VIEW

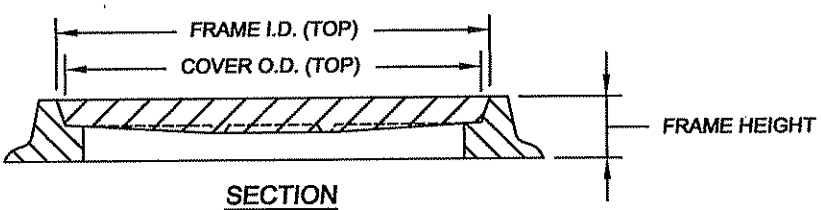

SECTION

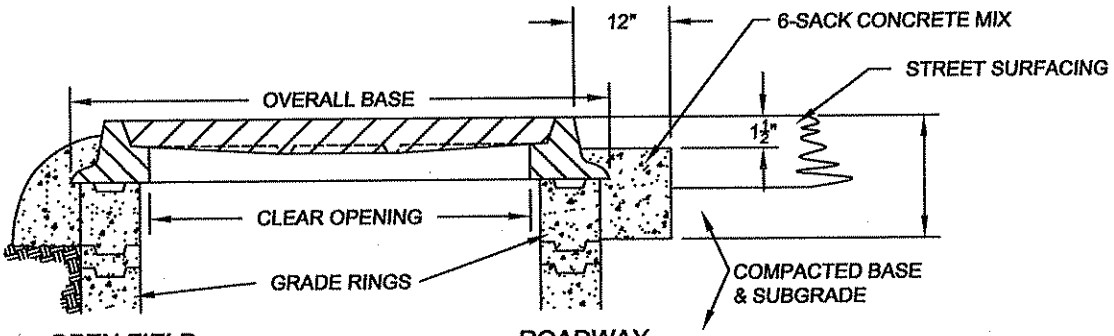

OPEN FIELD

ROADWAY

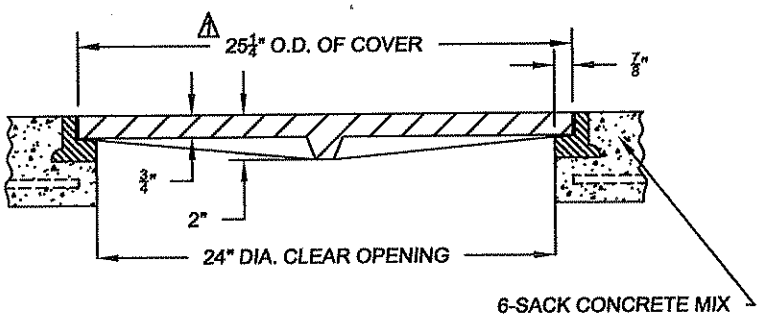

SECTION THRU FRAME & COVER

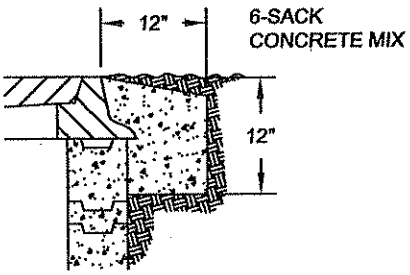

ROADWAY SHOULDER

City of Hemet
PUBLIC WORKS DEPARTMENT
ENGINEERING DIVISION
510 E. FLORIDA AVENUE
HEMET, CA 92543
(951) 765-2360

STORM DRAIN MANHOLE FRAME & COVER

JORGE L. BIAGIONI, PRINCIPAL ENGINEER R.C.E. 33751

MAR 2011
DATE

1
OF 2 SHEETS

REVISIONS

A	MARCH 2011	REVISION TO DIMENSION

N:\ PW\4100\COH_STDS\REVISIONS\DRAINAGE\D-305.dwg N.Beltran 2011

STANDARD NO.
D-305

NOTES

1. MANHOLE COVER SHALL BE DESIGNED FOR A.A.S.H.O. H-20 LOADING.
2. CAST IRON SHALL HAVE A MINIMUM TENSILE STRENGTH OF 30,000 p.s.i.
3. MANHOLE COVER SHALL BE ALHAMBRA FOUNDRY CO. TYPE A-1254-6 FOR 24" DIA. AND TYPE A-1251 FOR 36" DIA., OR APPROVED EQUAL.
4. CATCH BASIN MANHOLE COVER SHALL BE ALHAMBRA FOUNDRY CO. A-1530, NON-TRAFFIC, GALVANIZED.

⚠ MANHOLE COVER & FRAME REQUIRED DIMENSIONS

CLEAR OPENING	COVER O.D.	FRAME I.D.	FRAME HEIGHT	OVERALL BASE	TOTAL WT.
24"	25 ¼"	25 ½"	6"	32"	325 lbs.
36"	38"	38 ¼"	6"	44"	676 lbs.

City of Hemet
PUBLIC WORKS DEPARTMENT
ENGINEERING DIVISION
510 E. FLORIDA AVENUE
HEMET, CA 92543
(951) 765-2360

NOTES: MANHOLE & STORM DRAIN FRAME & COVER

JORGE L. BIAGIONI, PRINCIPAL ENGINEER R.C.E. 33751 — MAR 2011 DATE

REVISIONS

⚠ MARCH 2011	REVISIONS TO DIMENSIONS

N:\PW\4100\COH_STDS\REVISIONS\DRAINAGE\D-305A.dwg N.Beltran 2011

2 OF 2 SHEETS

STANDARD NO. D-305A

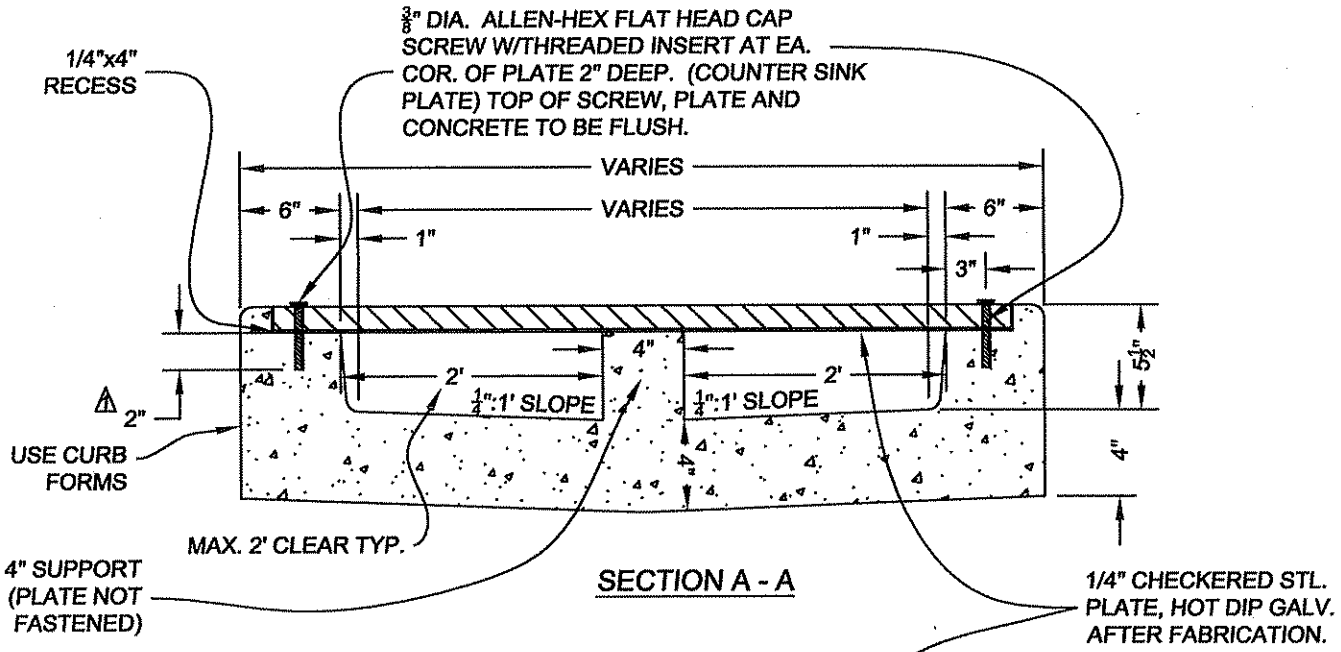

SECTION A - A

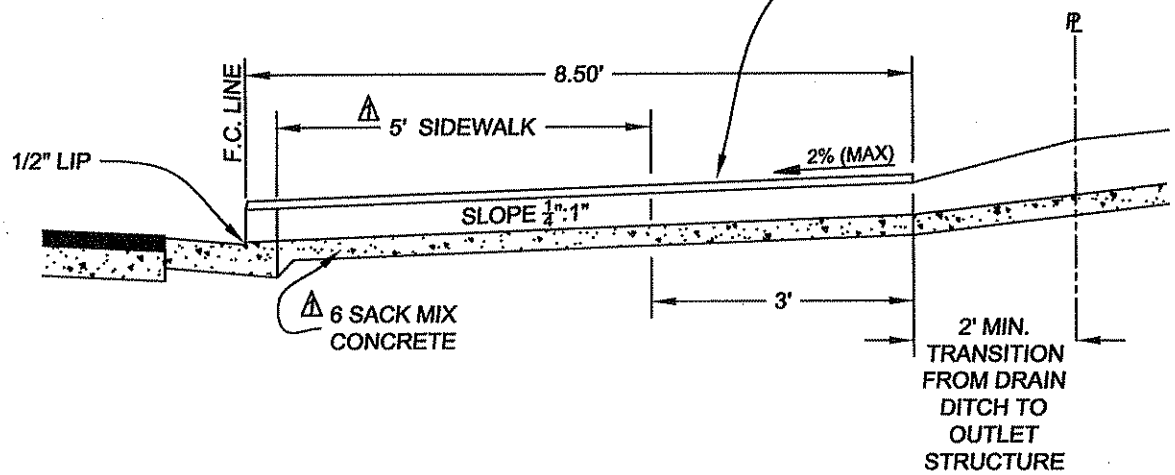

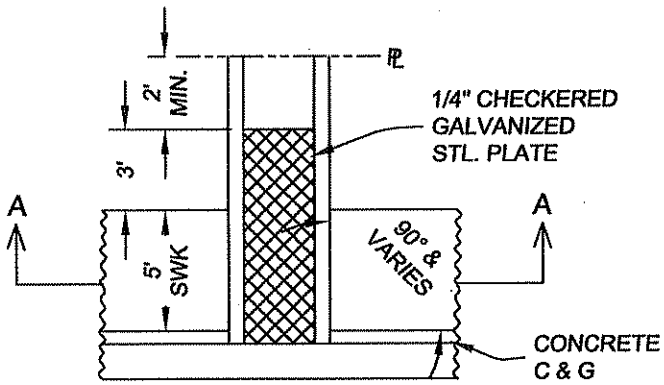

DRAINAGE OUTLET

City of Hemet
PUBLIC WORKS DEPARTMENT
ENGINEERING DIVISION
510 E. FLORIDA AVENUE
HEMET, CA 92543
(951) 765-2360

CURB OUTLET (WITH STEEL PLATE)

JORGE L. BIAGIONI, PRINCIPAL ENGINEER R.C.E. 33751 — MAR 2011 DATE

REVISIONS
△ MARCH 2011 REVISIONS TO DIMENSIONS

N:\ PW\4100\COH_STDS\REVISIONS\DRAINAGE\D-306.dwg N.Beltran 2011

1 OF 1 SHEETS

STANDARD NO. D-306

TROWEL FINISH TOP SURFACE AND REPRODUCE MARKINGS OF EXISTING SIDEWALK AND CURB.

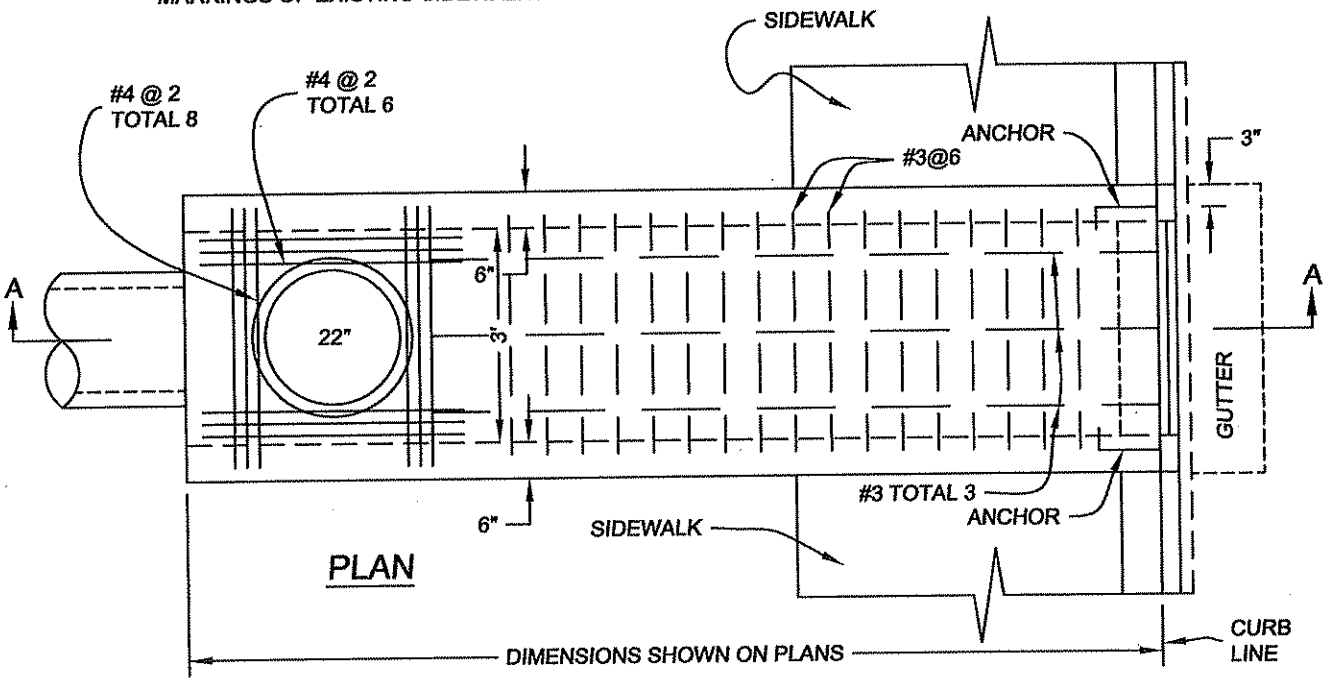

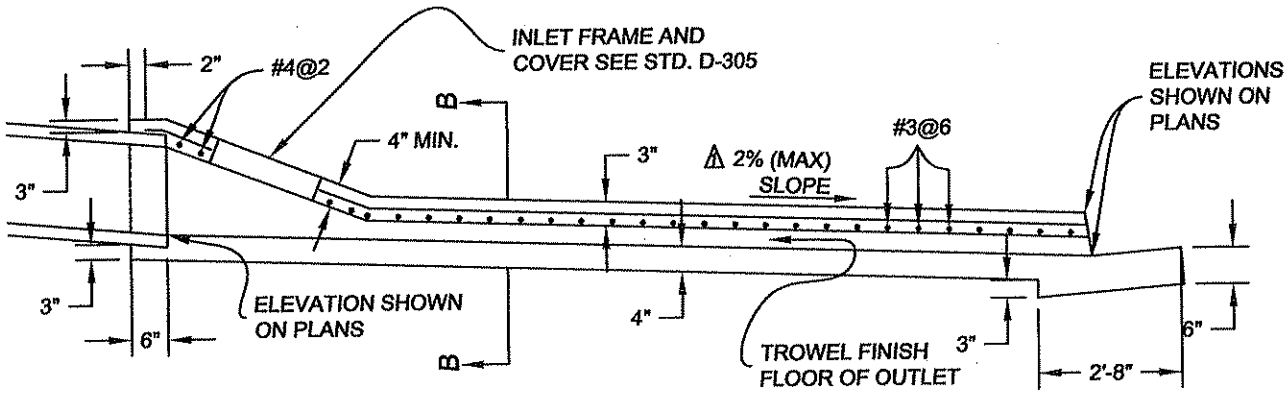

SECTION A-A

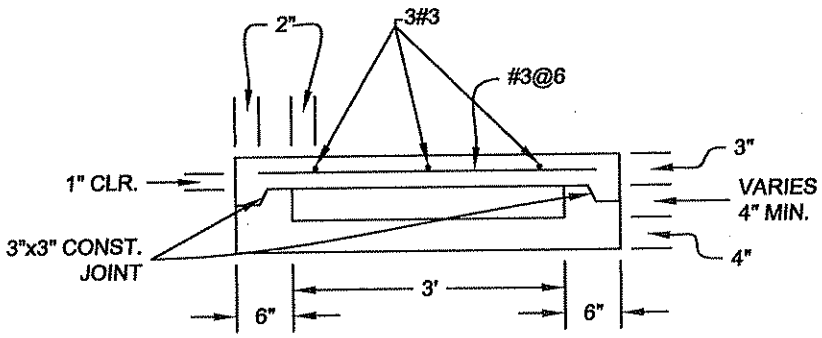

SECTION B-B

NOTES:

1. ALL CONCRETE SHALL BE A SIX SACK MIX.
2. SECTION TO BE SLOPED LATERALLY WITH TOP CONFORMING TO THE GRADES AT THE EXISTING SIDEWALK AND CURB.

City of Hemet
PUBLIC WORKS DEPARTMENT
ENGINEERING DIVISION
510 E. FLORIDA AVENUE
HEMET, CA 92543
(951) 765-2360

CURB OUTLET (WITH CONCRETE SLAB)

JORGE L. BIAGIONI, PRINCIPAL ENGINEER R.C.E. 33751 — MAR 2011 DATE

REVISIONS

1 MARCH 2011	REVISED SLOPE

N:\ PW\4100\COH_STDS\REVISIONS\DRAINAGE\D-307.dwg N.Beltran 2011

1 OF 1 SHEETS

STANDARD NO. D-307

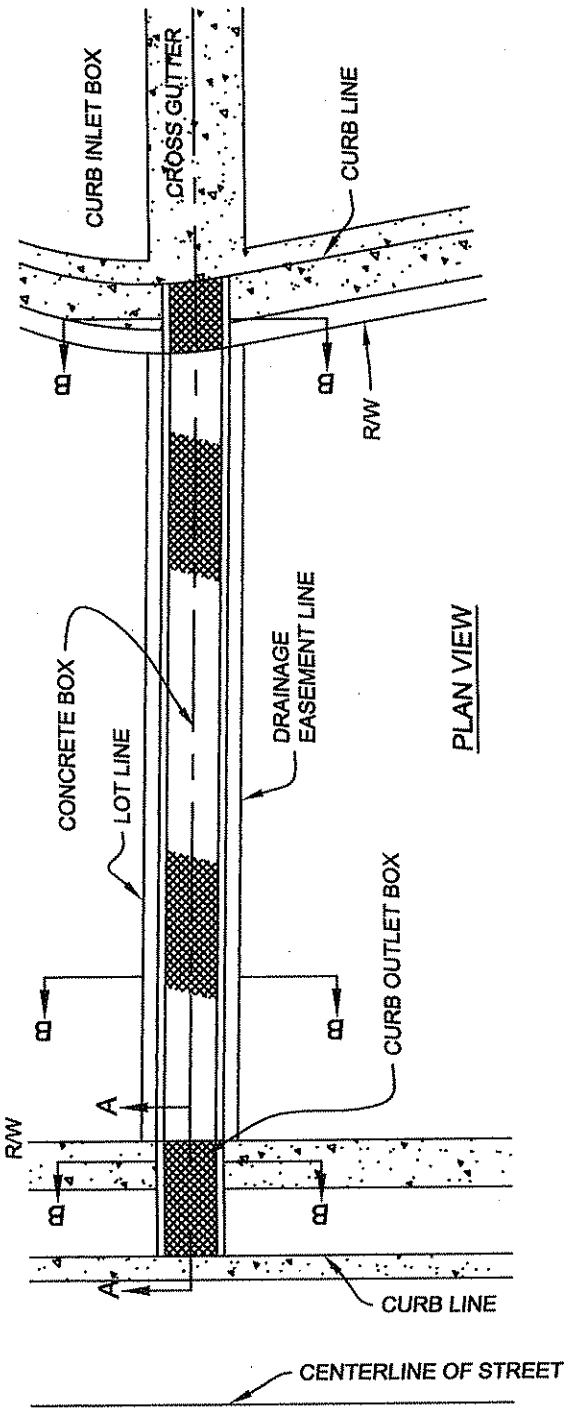

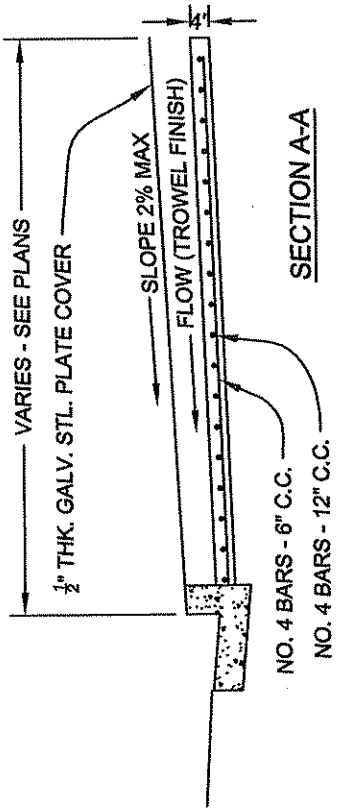

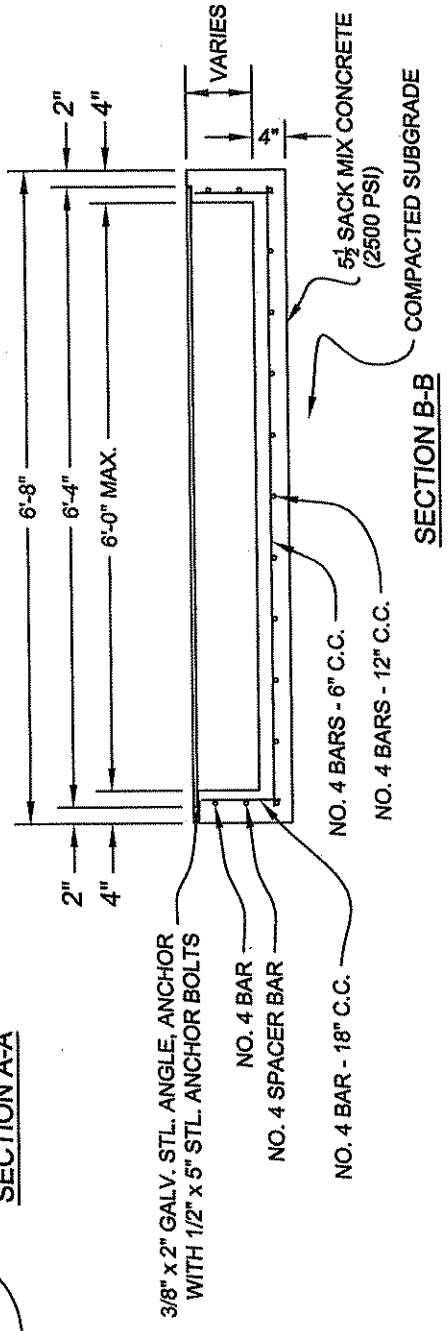

City of Hemet
PUBLIC WORKS DEPARTMENT
ENGINEERING DIVISION
510 E. FLORIDA AVENUE
HEMET, CA 92543
(951) 765-2360

SIDEWALK DRAINAGE OUTLET THROUGH CURB

MICHAEL A. GOW, PW DIRECTOR/CITY ENG. R.C.E. 54164 — MAR 2009 DATE

REVISIONS

N:\ PW\4100\COH_STDS\REVISIONS\DRAINAGE\D-308.dwg — N.Beltran 2009

1 OF 2 SHEETS

STANDARD NO. D-308

NOTES

1. ALL EXPOSED STEEL SHALL BE GALVANIZED.
2. REINFORCING STEEL SHALL BE EMBEDDED 1½ DIAMETERS OR 1" MINIMUM.
3. GRIND OFF ROUGH AND SHARP EDGES OF EXPOSED ENDS OF PLATE COVERS.
4. ½" THK. GALVANIZED STEEL PLATE COVER WITH ½" DIAMONDS TO BE A MAXIMUM OF 3' WIDE x 6' LONG. CENTER SUPPORTS WILL BE REQUIRED FOR ANY LENGTH EXCEEDING THESE MAXIMUMS.
5. SEE PLANS FOR CURB ELEVATIONS AND DIMENSIONS.

City of Hemet
PUBLIC WORKS DEPARTMENT
ENGINEERING DIVISION
510 E. FLORIDA AVENUE
HEMET, CA 92543
(951) 765-2360

NOTES: SIDEWALK DRAINAGE OUTLET THROUGH CURB

MICHAEL A. GOW, PW DIRECTOR/CITY ENG. R.C.E. 54164 — MAR 2009 DATE

REVISIONS

N:\PW\4100\COH_STDS\REVISIONS\DRAINAGE\D-308A.dwg N.Beltran 2009

2 OF 2 SHEETS

STANDARD NO. D-308A

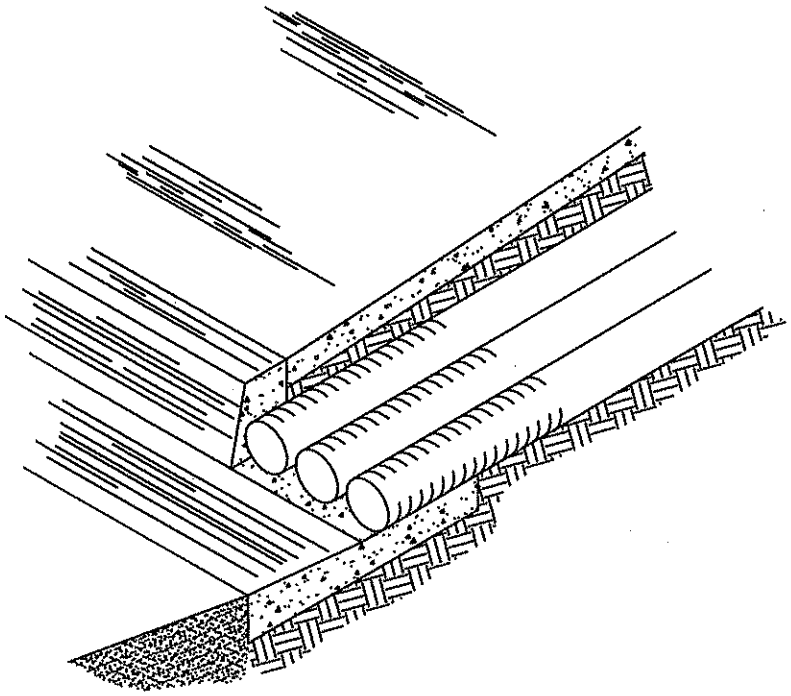

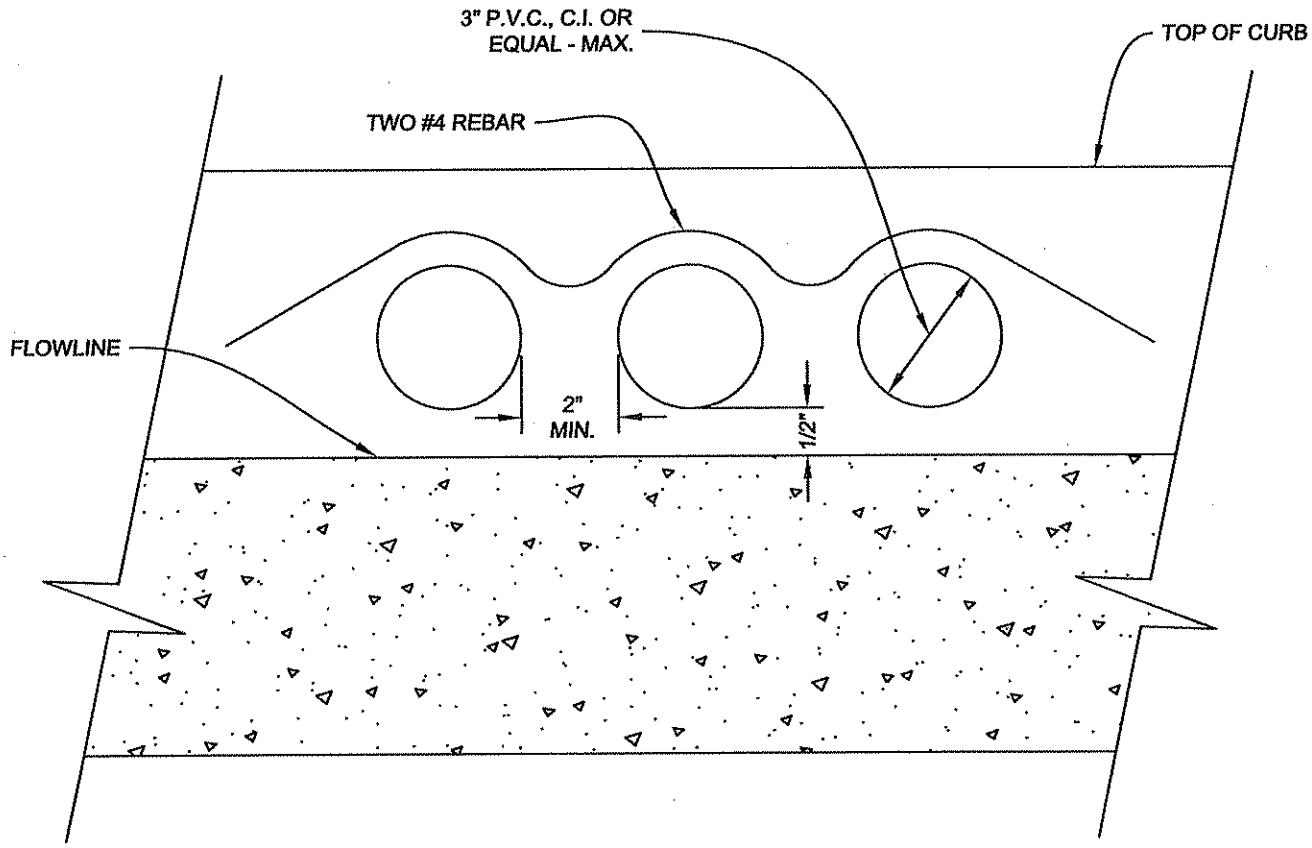

City of Hemet

PUBLIC WORKS DEPARTMENT

ENGINEERING DIVISION

510 E. FLORIDA AVENUE
HEMET, CA 92543
(951) 765-2360

MINOR SIDEWALK DRAINAGE OUTLET

MICHAEL A. GOW, PW DIRECTOR/CITY ENG. R.C.E. 54164

MAR 2009
DATE

REVISIONS

N:\ PW\4100\COH_STDS\REVISIONS\DRAINAGE\D-309.dwg N.Beltran 2009

1
OF 1 SHEETS

STANDARD NO.
D-309

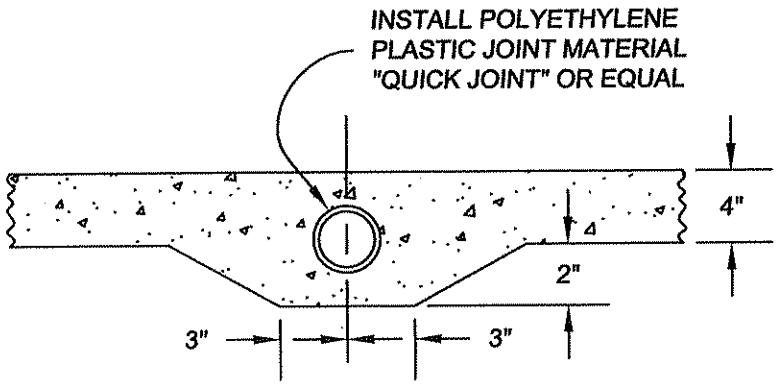

SECTION A-A

TYPICAL SECTION OF 3" TRANSITE OR DUCTILE IRON OR EQUAL.

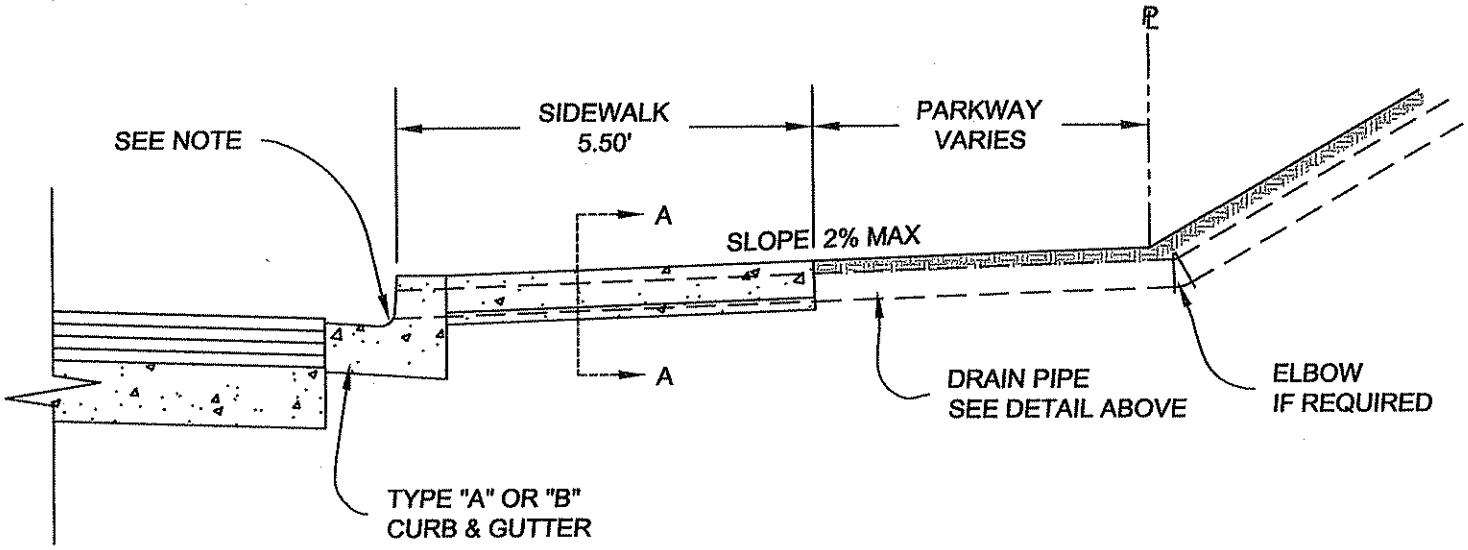

NOTE:

FLOWLINE OF PIPE 1/2" ABOVE GUTTER
FLOWLINE OF CURB, CURB MUST BE BORED.

City of Hemet
PUBLIC WORKS DEPARTMENT
ENGINEERING DIVISION
510 E. FLORIDA AVENUE
HEMET, CA 92543
(951) 765-2360

YARD DRAIN THROUGH CURB

MICHAEL A. GOW, PW DIRECTOR/CITY ENG. R.C.E. 54164 — MAR 2009 DATE

REVISIONS

N:\ PW\4100\COH_STDS\REVISIONS\DRAINAGE\D-310.dwg — N.Beltran 2009

1 OF 1 SHEETS

STANDARD NO. D-310

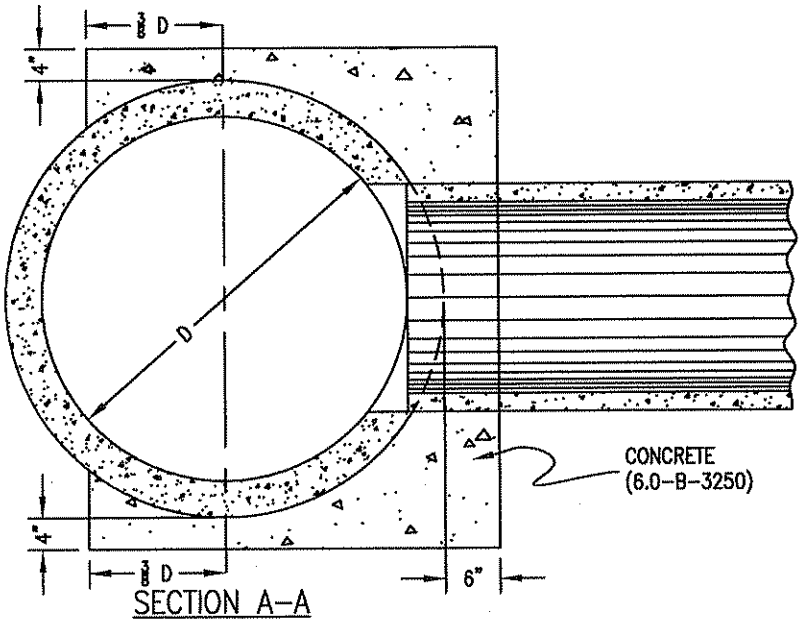

SECTION A-A

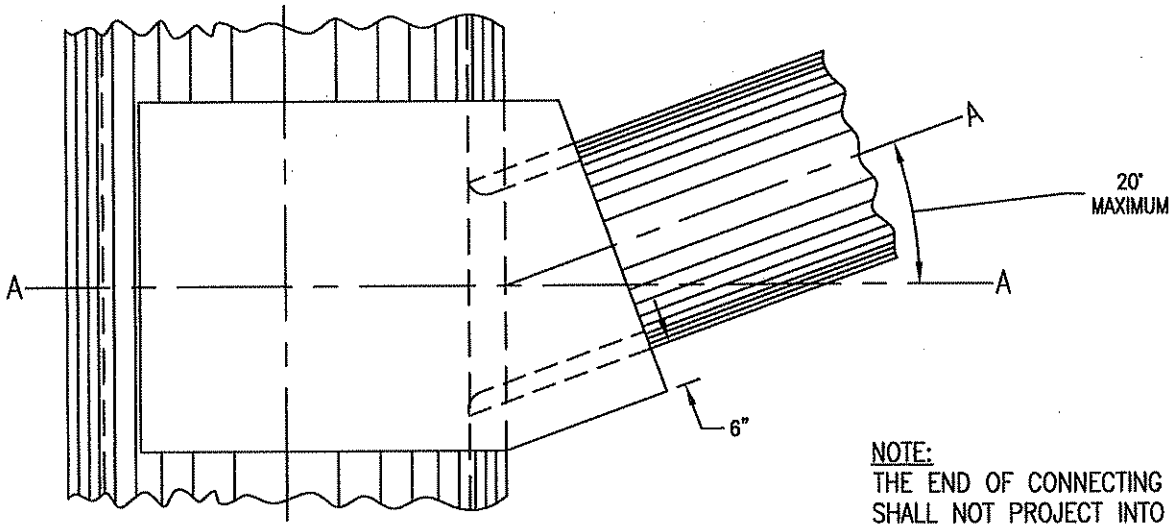

NOTE:
THE END OF CONNECTING PIPE SHALL NOT PROJECT INTO THE WATERWAY OF THE LARGER PIPE.

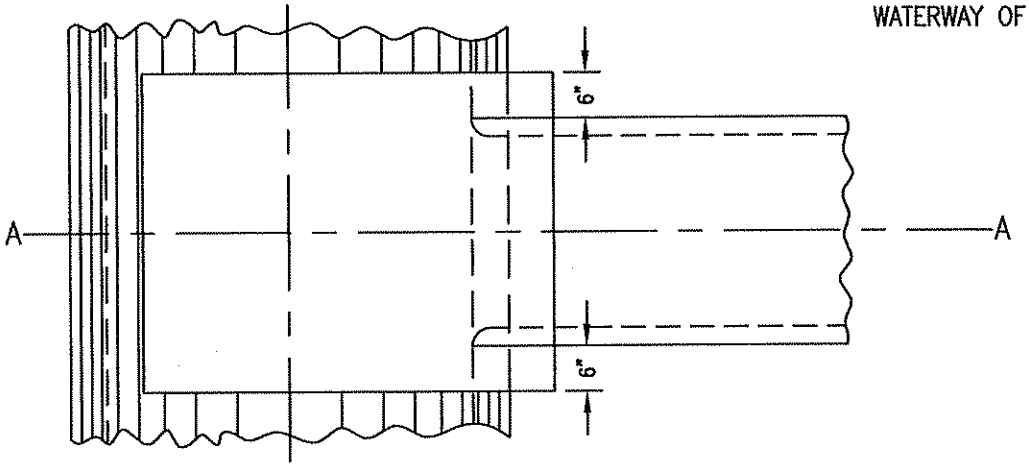

City of Hemet
PUBLIC WORKS DEPARTMENT
ENGINEERING DIVISION
510 E. FLORIDA AVENUE
HEMET, CA 92543
(951) 765-2360

CONCRETE LUG

MICHAEL A. GOW, PW DIRECTOR/CITY ENG. R.C.E. 54164 — MAR 2009 DATE

REVISIONS

N:\ PW\4100\COH_STDS\REVISIONS\DRAINAGE\D-311.dwg — N.Beltran 2009

1 OF 1 SHEETS

STANDARD NO. D-311

D	L	T
12"	1.0'	4"
18"	1.0'	5"
24"	1.0'	6"
36"	1.5'	8"
48"	1.5'	10"
57"	1.5'	10"
60"	1.75'	11"
66"	1.75'	11"

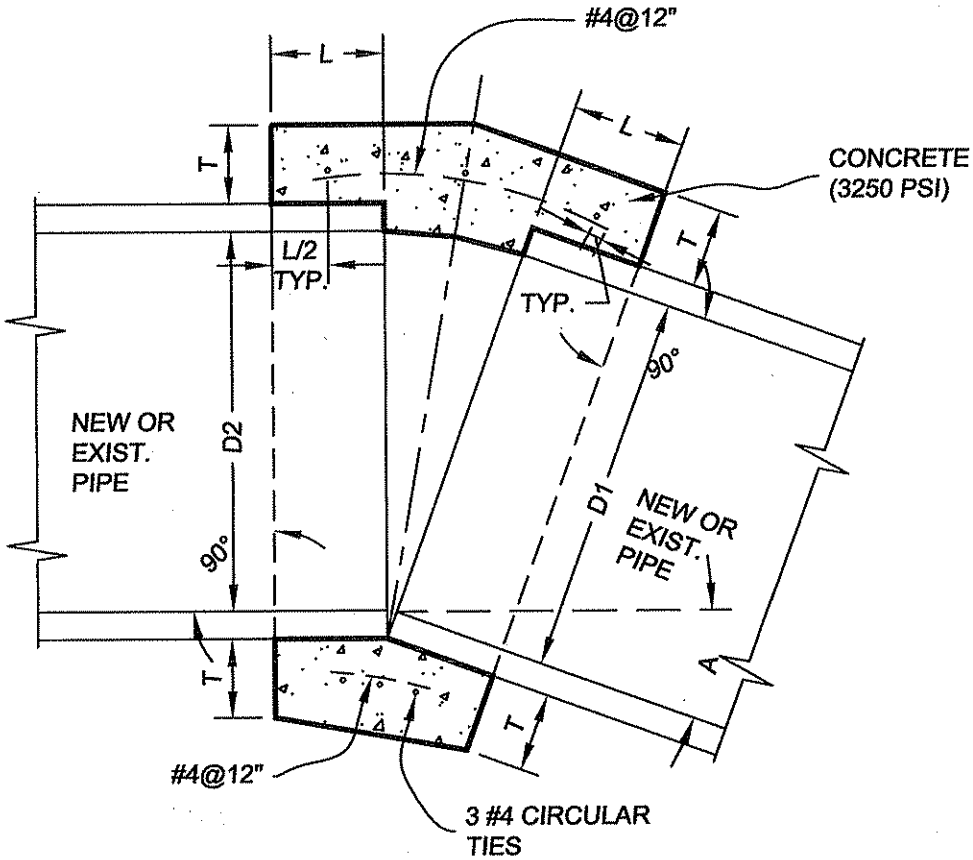

NOTES:

1. A CONCRETE COLLAR IS REQUIRED WHERE THE CHANGE IN GRADE EXCEEDS 0.10' PER FT.
2. WHERE PIPES OF DIFFERENT DIA. ARE JOINED WITH A CONCRETE COLLAR, L & T SHALL BE THOSE OF THE LARGER PIPE.
   D=D1 OR D2 WHICHEVER IS GREATER.
3. FOR PIPE SIZE NOT LISTED USE NEXT SIZE LARGER.
4. FOR PIPES LARGER THAN 66" A SPECIAL COLLAR DETAIL IS REQUIRED.
5. OMIT REINFORCING ON PIPES 24" AND LESS IN DIA. AND ON ALL PIPES WHERE ANGLE "A" IS LESS THAN 10°.
6. WHERE REINFORCING IS REQUIRED THE DIA. OF THE CIRCULAR TIES SHALL BE: D+(2xWALLTHK.)+8"
7. WHEN D1 IS EQUAL TO OR LESS THAN D2, JOIN INVERTS AND WHEN D1 IS GREATER THAN D2, JOIN SOFFITS.
8. PIPE MAY BE CORRUGATED METAL PIPE, CONC. PIPE OR REINFORCED CONC. PIPE.

City of Hemet
PUBLIC WORKS DEPARTMENT
ENGINEERING DIVISION
510 E. FLORIDA AVENUE
HEMET, CA 92543
(951) 765-2360

CONCRETE PIPE COLLAR FOR PIPES 12' THRU 66"

MICHAEL A. GOW, PW DIRECTOR/CITY ENG. R.C.E. 54164 — MAR 2009 DATE

REVISIONS

N:\PW4100\COH_STDS\REVISIONS\DRAINAGE\D-312.dwg — N.Beltran 2009

1 OF 1 SHEETS

STANDARD NO. D-312

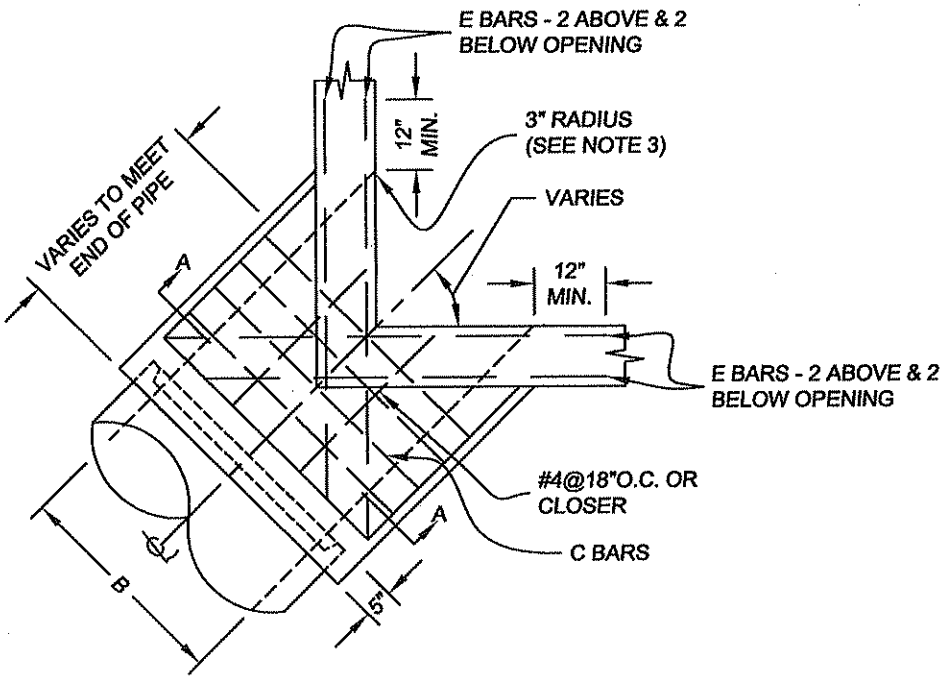

PLAN
CORNER CONNECTION

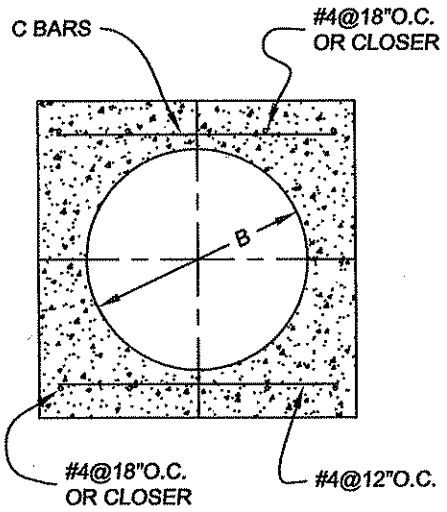

SECTION A-A

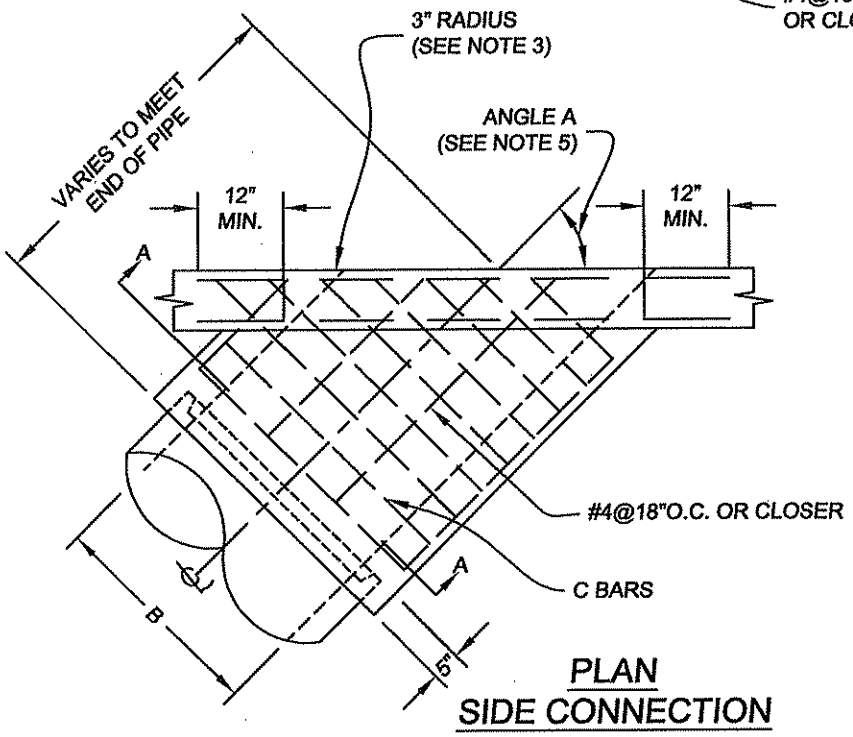

PLAN
SIDE CONNECTION

City of Hemet
PUBLIC WORKS DEPARTMENT
ENGINEERING DIVISION
510 E. FLORIDA AVENUE
HEMET, CA 92543
(951) 765-2360

CONNECTION TO CURB INLET FOR PIPES 12" THRU 72"

MICHAEL A. GOW, PW DIRECTOR/CITY ENG. R.C.E. 54164 — MAR 2009 DATE

REVISIONS

N:\ PW\4100\COH_STDS\REVISIONS\DRAINAGE\D-313.dwg — N.Beltran 2009

1 OF 2 SHEETS

STANDARD NO. D-313

NOTES:

1. REINFORCING STEEL SHALL BE CLEAR FROM FACE OF CONCRETE UNLESS OTHERWISE SHOWN.

2. REINFORCING STEEL FOR INSIDE FACE OF CURB INLET BASIN SHALL BE CUT AT CENTER OF OPENING AND BENT INTO WALLS OF MONOLITHIC CONNECTION. REINFORCING STEEL FOR OUTSIDE FACE OF CATCH BASIN WALL SHALL BE CUT 2" CLEAR OF OPENING.

3. CONNECTION SHALL BE POURED MONOLITHIC WITH CURB INLET. THE ROUNDED EDGE OF OUTLET SHALL BE CONSTRUCTED BY POURING CONCRETE AGAINST A CURVED FORM WITH A RADIUS OF 3".

4. FLOOR OF STRUCTURE SHALL BE STEEL TROWELED TO SPRING LINE.

5. CONNECTIONS SHALL BE CONSTRUCTED WHEN:
   (A) PIPES, 12" THROUGH 72" IN DIAMETER, INLET OR OUTLET THROUGH CORNER OF CURB INLET.
   (B) ANGLE A, FOR PIPES 24" THROUGH 30" IN DIAMETER, IS 70° OR LESS.
   (C) PIPES, 33" THROUGH 72" IN DIAMETER, INLET OR OUTLET THROUGH THE SIDE WALL OF CURB INLET.

6. ALL CONCRETE SHALL BE 6 SACKS (3250 PSI).

B	T	C BARS	D&E BARS	B	T	C BARS	D&E BARS
12"	4"	#4 @ 6" O.C.	#5	42"	$7\frac{1}{2}$"	#5 @ 6" O.C.	#5
15"	$4\frac{1}{4}$"			45"	$7\frac{3}{4}$"		
18"	$4\frac{1}{2}$"			48"	8"		
21"	5"			51"	$8\frac{1}{2}$"		
24"	$5\frac{1}{4}$"			54"	9"		
27"	$5\frac{1}{2}$"			57"	$9\frac{1}{4}$"		
30"	6"			60"	$9\frac{1}{2}$"		
33"	$6\frac{1}{4}$"			63"	10"		
36"	$6\frac{1}{2}$"			66"	$10\frac{1}{4}$"		
39"	7"			69"	$10\frac{3}{4}$"		
				72"	11"		

City of Hemet
PUBLIC WORKS DEPARTMENT
ENGINEERING DIVISION
510 E. FLORIDA AVENUE
HEMET, CA 92543
(951) 765-2360

NOTES: CONNECTION TO CURB INLET FOR PIPES 12" THRU 72"

MICHAEL A. GOW, PW DIRECTOR/CITY ENG. R.C.E. 54164 — MAR 2009 DATE

REVISIONS

N:\ PW\4100\COH_STDS\REVISIONS\DRAINAGE\D-313A.dwg N.Beltran 2009

2 OF 2 SHEETS

STANDARD NO. D-313A

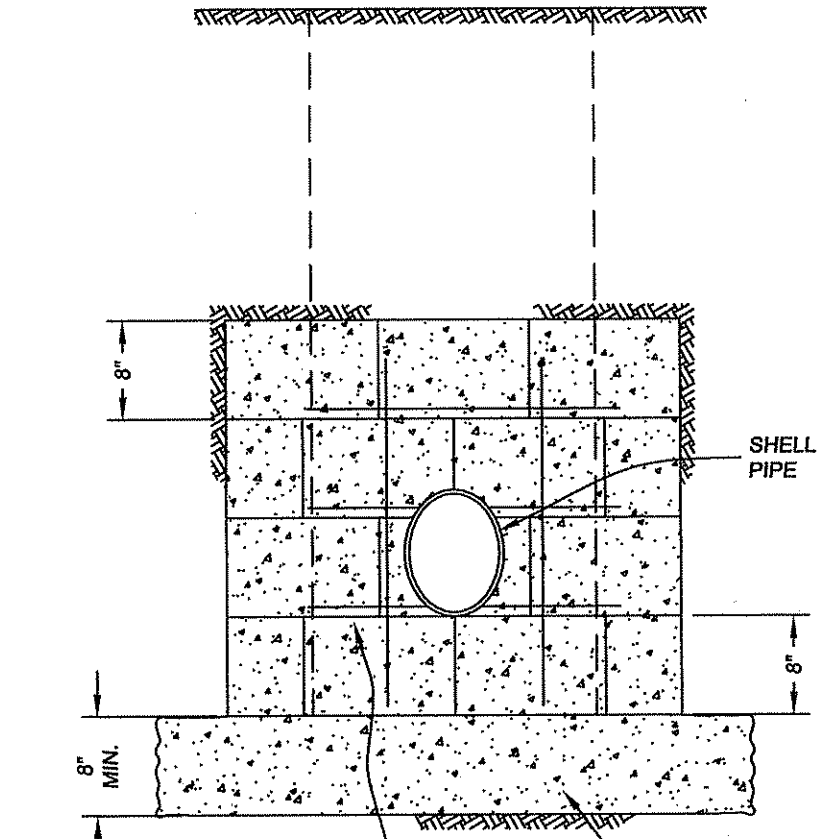

SECTION

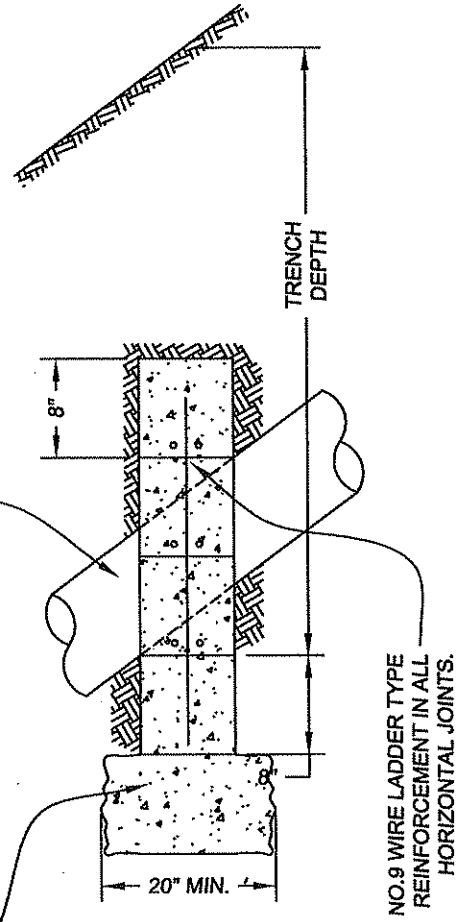

ELEVATION

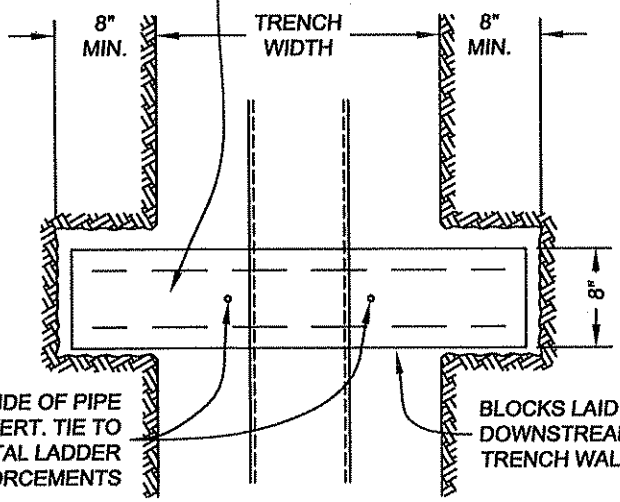

PLAN

City of Hemet
PUBLIC WORKS DEPARTMENT
ENGINEERING DIVISION
510 E. FLORIDA AVENUE
HEMET, CA 92543
(951) 765-2360

CONCRETE PIPE SLOPE ANCHORS

MICHAEL A. GOW, PW DIRECTOR/CITY ENG. R.C.E. 54164 — MAR 2009 DATE

REVISIONS

N:\ PW\4100\COH_STDS\REVISIONS\DRAINAGE\D-314.dwg — N.Beltran 2009

1 OF 2 SHEETS

STANDARD NO. D-314

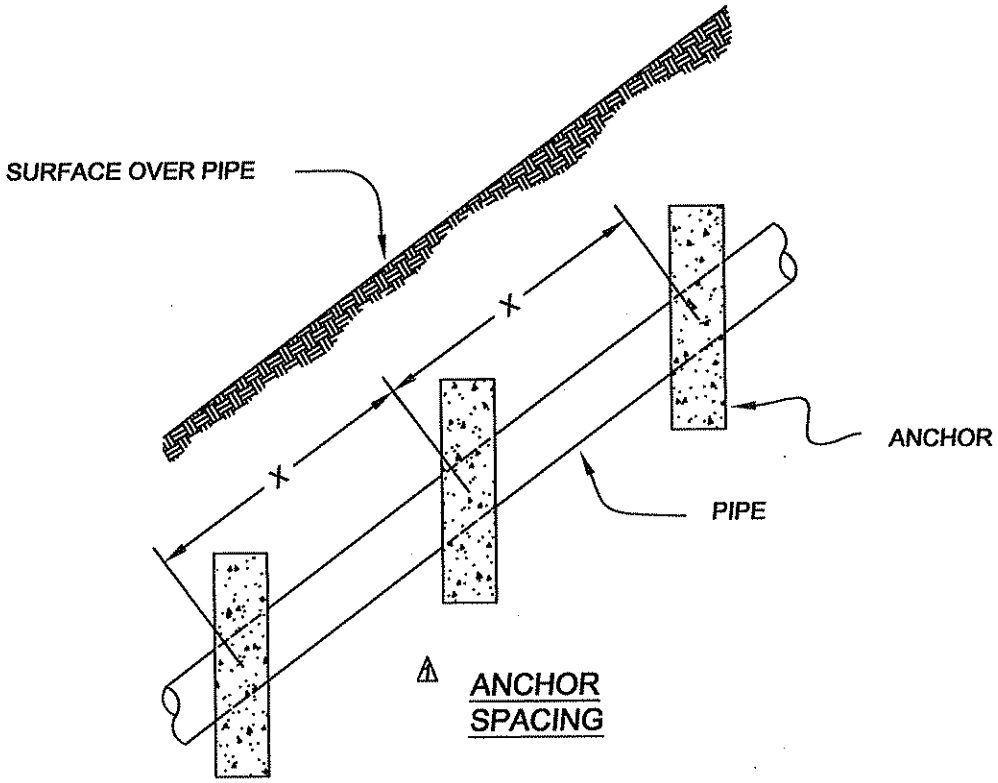

ANCHOR SPACING TABLE		
PIPE GRADE	PIPE SLOPE	X DISTANCE
100%	1:1	16
66.6%	1½:1	18
50%	2:1	20
40%	2½:1	22
33.3%	3:1	24

NOTES:

1. PIPE ANCHORS REQUIRED ON ALL SLOPES OF 3:1 OR STEEPER.
2. ALL REINFORCING STEEL SHALL BE #4 BARS.
3. CONCRETE SHALL BE CLASS "A" 6 SACKS, 3250 PSI.

City of Hemet
PUBLIC WORKS DEPARTMENT
ENGINEERING DIVISION
510 E. FLORIDA AVENUE
HEMET, CA 92543
(951) 765-2360

CONCRETE PIPE SLOPE ANCHORS

JORGE L. BIAGIONI, PRINCIPAL ENGINEER R.C.E. 33751 — MAR 2011 DATE

REVISIONS

A	MARCH 2011	REVISIONS TO ANCHOR DETAIL

N:\ PW\4100\COH_STDS\REVISIONS\DRAINAGE\D-314A.dwg N.Beltran 2011

2 OF 2 SHEETS

STANDARD NO. D-314A

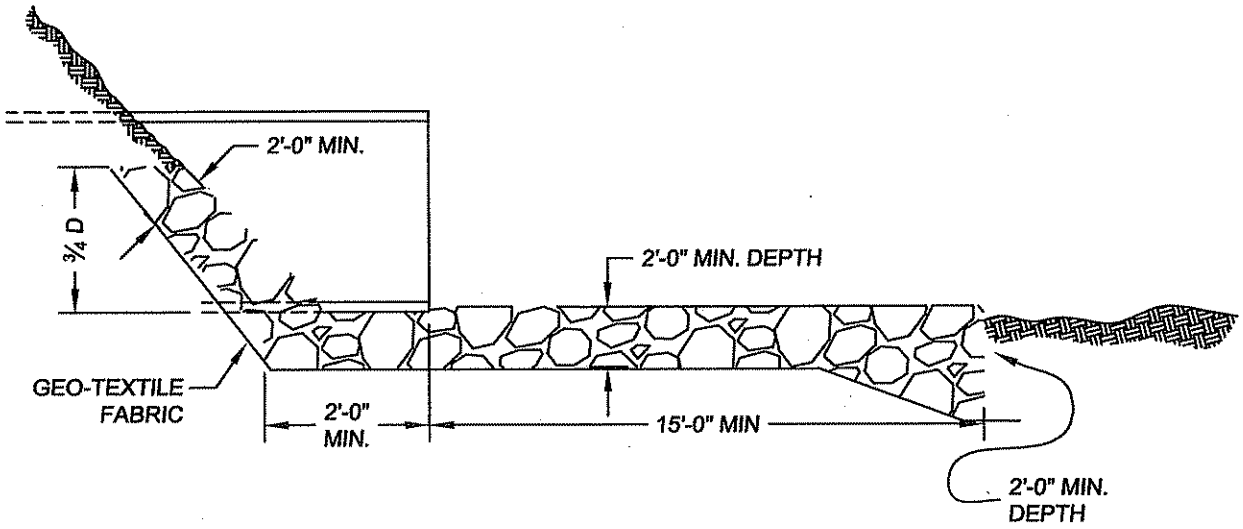

SECTION A-A

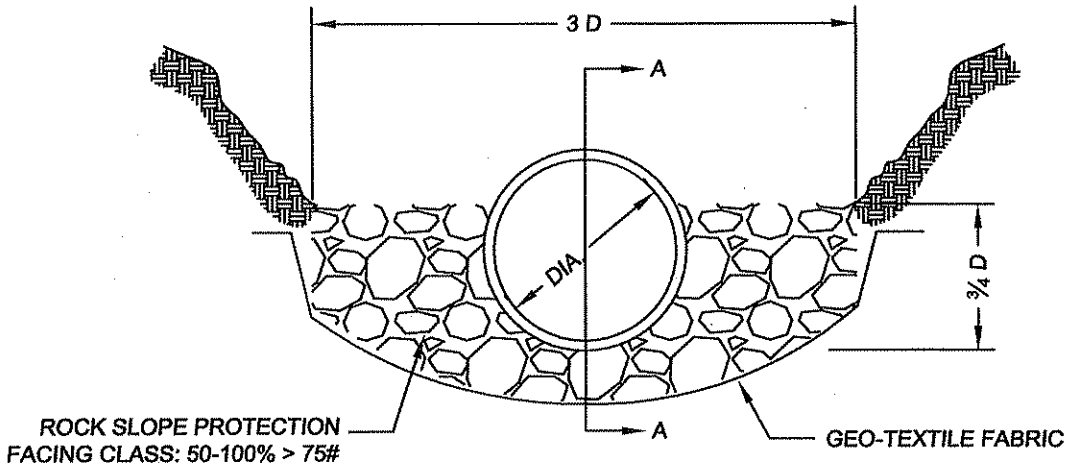

END ELEVATION OF PIPE

NOTES:

1. SHAPE SHALL CONFORM TO OUTLET CHANNEL.
2. CHANNEL OR PIPE OUTLET ROCK SLOPE PROTECTION SHALL BE USED WHEN OUTLET VELOCITY EXCEEDS 6 F.P.S. AND SOIL AT OUTLET IS SUSCEPTIBLE TO EROSION.

LEGEND ON PLAN

City of Hemet **PUBLIC WORKS DEPARTMENT** **ENGINEERING DIVISION** 510 E. FLORIDA AVENUE HEMET, CA 92543 (951) 765-2360	**CHANNEL OR PIPE OUTLET ROCK SLOPE PROTECTION (RIP RAP)**	1 OF 1 SHEETS
	MICHAEL A. GOW, PW DIRECTOR/CITY ENG. R.C.E. 54164 — MAR 2009 DATE	STANDARD NO. D-315
	REVISIONS	
	N:\ PW\4100\COH_STDS\REVISIONS\DRAINAGE\D-315.dwg — N.Beltran 2009	

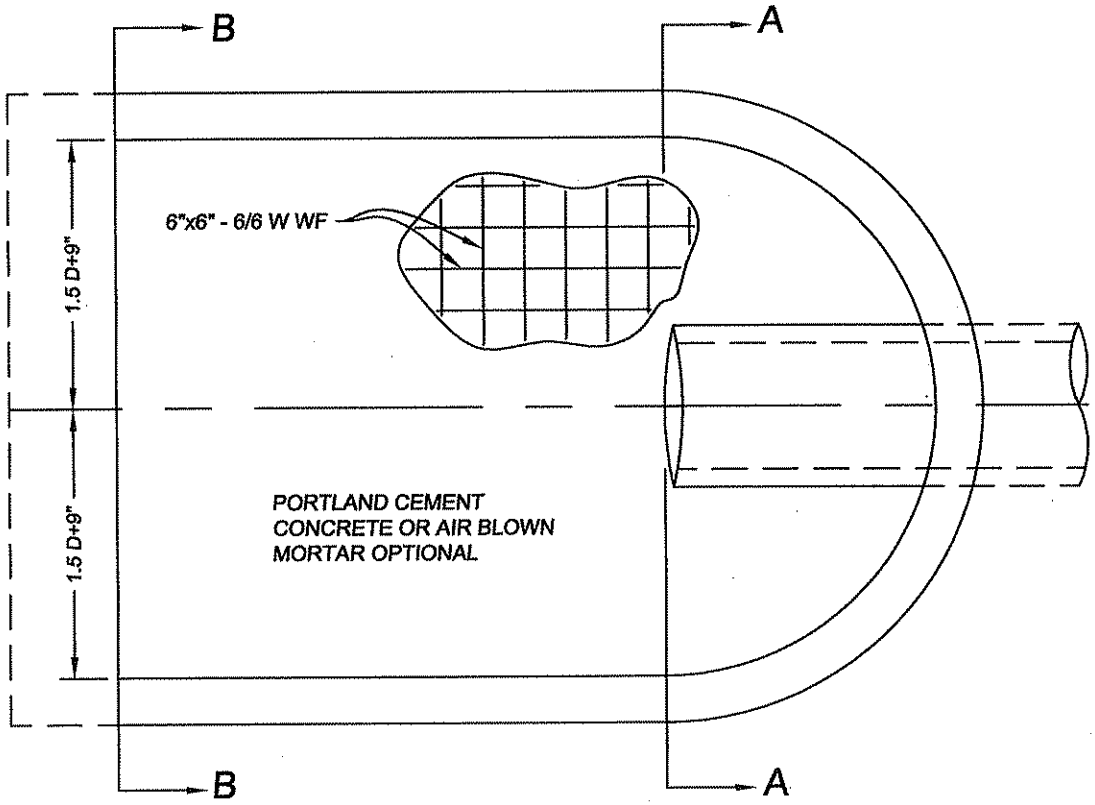

PLAN VIEW

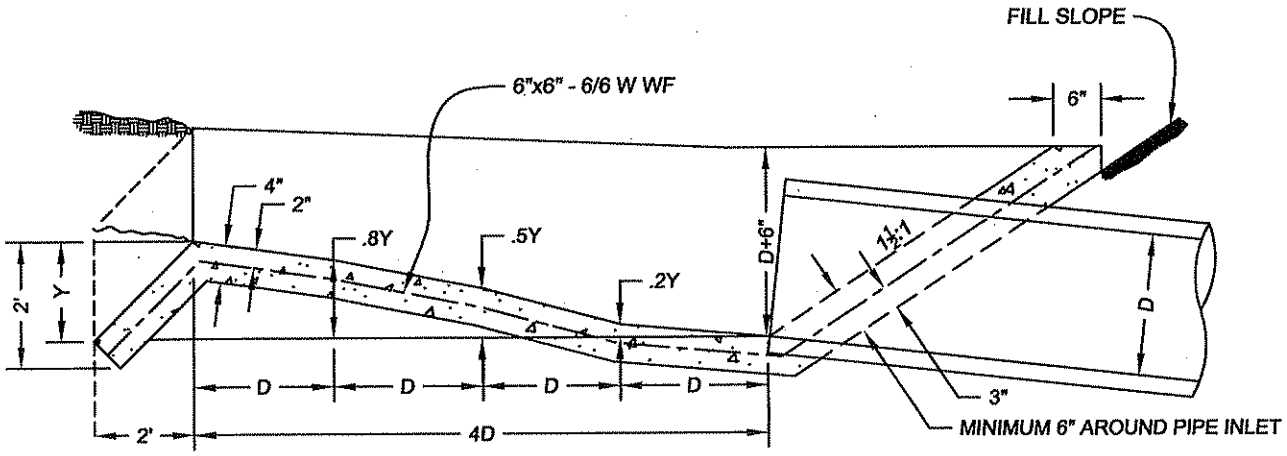

THE DIMENSION "Y" IS DEPENDENT UPON THE UPSTREAM CHANNEL SLOPE

PROFILE VIEW

City of Hemet
PUBLIC WORKS DEPARTMENT
ENGINEERING DIVISION
510 E. FLORIDA AVENUE
HEMET, CA 92543
(951) 765-2360

INLET APRON FOR CULVERTS UP TO 42" DIA.

MICHAEL A. COW, PW DIRECTOR/CITY ENG. R.C.E. 54164 — MAR 2009 DATE

REVISIONS

N:\ PW\4100\COH_STDS\REVISIONS\DRAINAGE\D-316.dwg — N.Beltran 2009

1 OF 2 SHEETS

STANDARD NO. D-316

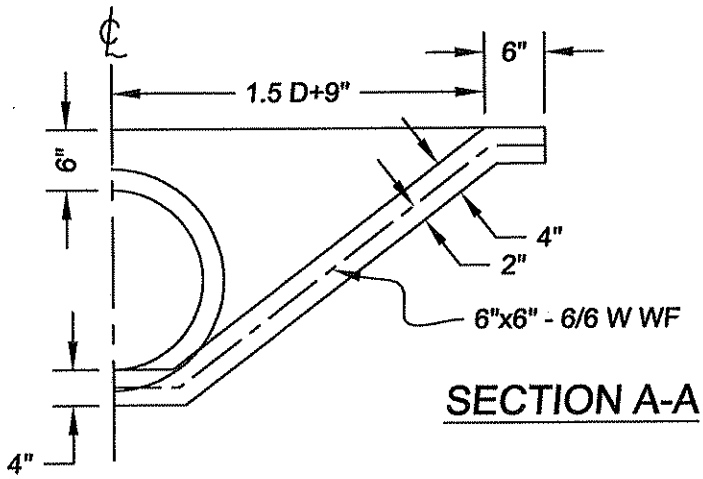

SYM. ABOUT ℄ EXCEPT FOR MULTIPLE PIPE INSTALLATION. (SEE NOTE 1)

SECTION A-A

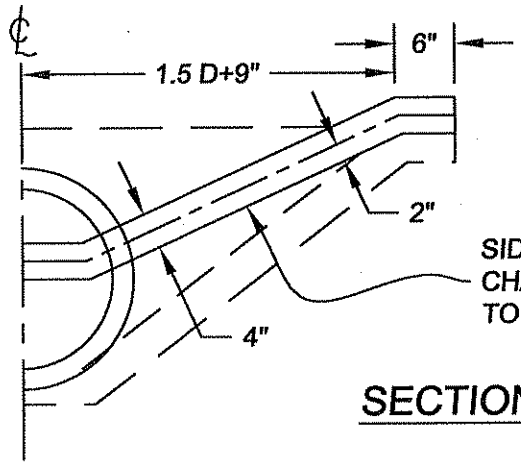

SYM. ABOUT ℄ EXCEPT FOR MULTIPLE PIPE INSTALLATION. (SEE NOTE 1)

SIDE SLOPES SHALL CONFORM TO THE UPSTREAM CHANNEL AND SHALL HAVE A SMOOTH TRANSITION TO CULVERT ENTRANCE.

SECTION B-B

CONCRETE SHALL BE CLASS "A" 3250 PSI

NOTES:

1. WHEN MORE THAN ONE PIPE IS USED THE PROFILE VIEW SHOWN SHALL HOLD FOR THE DISTANCES ACROSS ALL PIPE OPENINGS. SECTIONS A-A AND B-B SHALL BE FROM THE OUTER MOST PIPE. THE DISTANCE BETWEEN PIPES SHALL BE D/2 FOR ROUND AND SPAN/2 FOR ARCH PIPE.
2. CULVERT SHALL BE CUT OFF EVEN WITH APRON SURFACE WHEN REQUIRED BY CITY ENGINEER. △1

City of Hemet
PUBLIC WORKS DEPARTMENT
ENGINEERING DIVISION
510 E. FLORIDA AVENUE
HEMET, CA 92543
(951) 765-2360

INLET APRON FOR CULVERTS UP TO 42" DIA.

JORGE L. BIAGIONI, PRINCIPAL ENGINEER R.C.E. 33751 — MAR 2011 DATE

REVISIONS

△1 MARCH 2011 REVISED NOTE 2.

N:\PW\4100\COH_STDS\REVISIONS\DRAINAGE\D-316A.dwg N.Beltran 2011

2 OF 2 SHEETS

STANDARD NO. D-316A

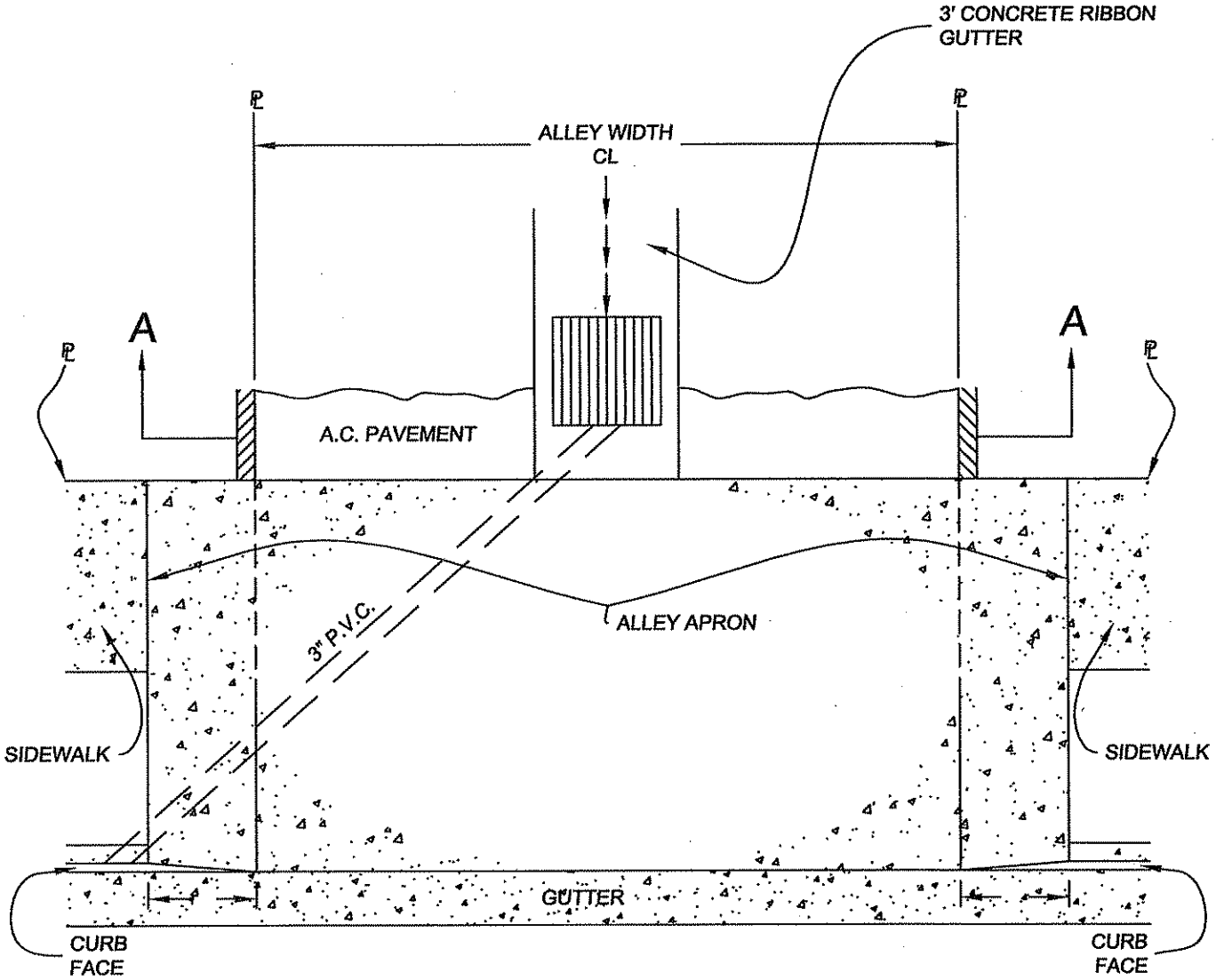

PLAN

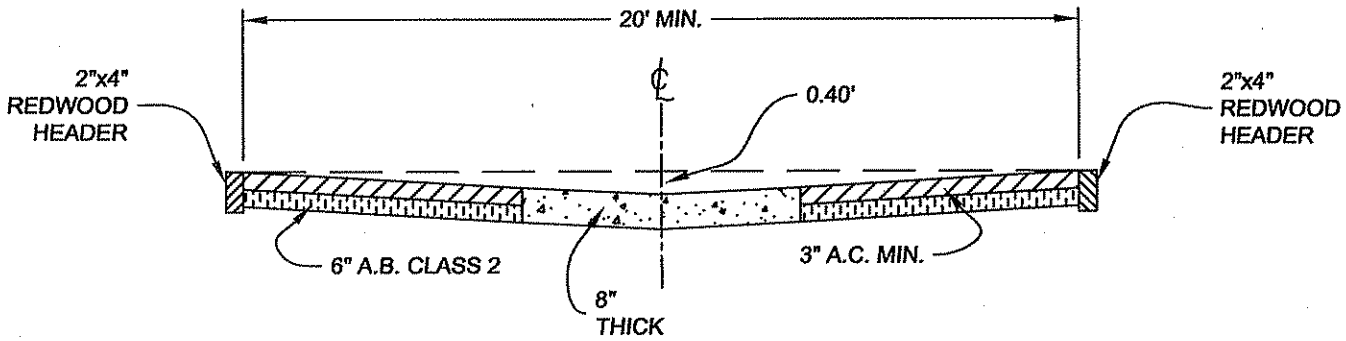

SECTION A-A

City of Hemet
PUBLIC WORKS DEPARTMENT
ENGINEERING DIVISION
510 E. FLORIDA AVENUE
HEMET, CA 92543
(951) 765-2360

TYPICAL ALLEY AND ALLEY APRON SECTIONS

MICHAEL A. GOW, PW DIRECTOR/CITY ENG. R.C.E. 54164 — MAR 2009 DATE

REVISIONS

N:\ PW\4100\COH_STDS\REVISIONS\DRAINAGE\D-317.dwg — N.Beltran 2009

1 OF 1 SHEETS

STANDARD NO. D-317

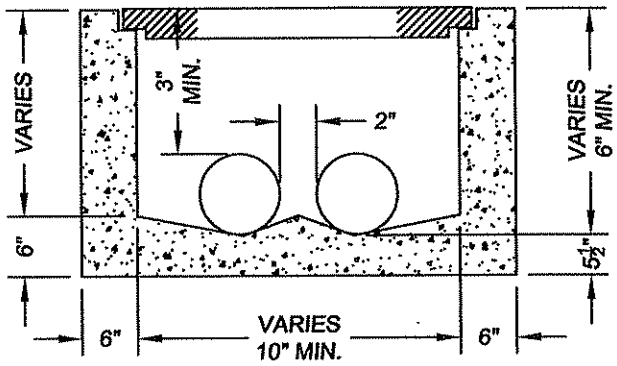

SECTION A - A

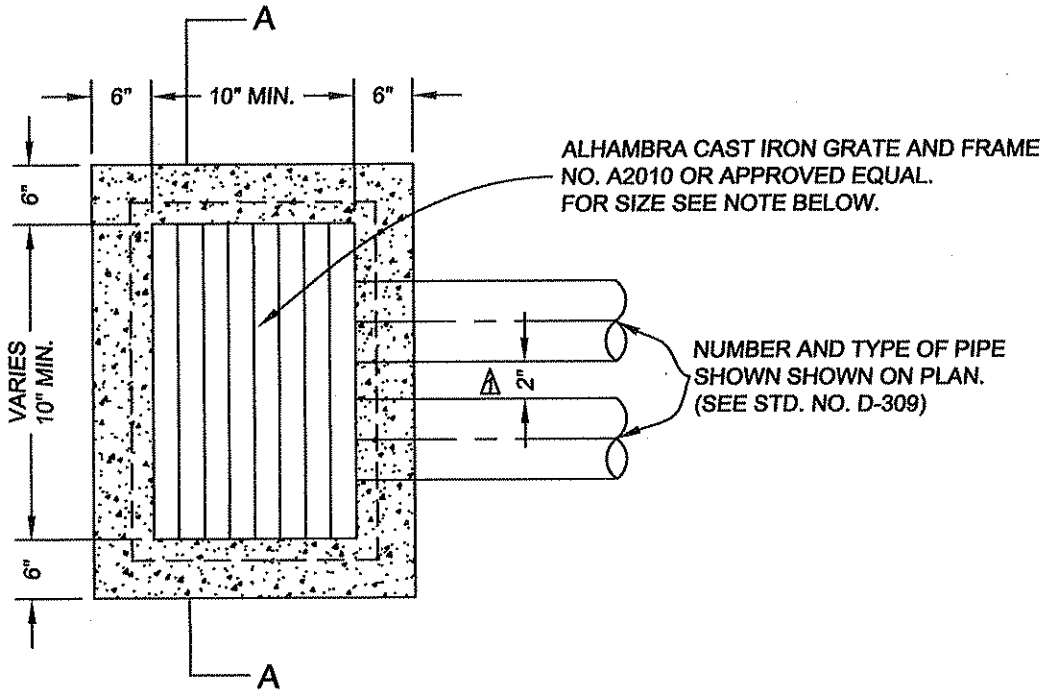

NOTES:

1. A2010 = STANDARD WEIGHT GRATES AND FRAMES (NON-TRAFFIC).
2. A2012 = HEAVY TRAFFIC WEIGHT GRATES AND FRAMES.
3. ALL PVC USED SHALL BE SCH 80.
4. THE USE OF THIS INLET MUST BE APPROVED BY THE CITY ENGINEER.
5. CONCRETE SHALL BE CLASS "A" (3250 PSI), 6 SACKS.

TABLE

GRATE DIMENSION	3" DIA. PVC EACH
12"x12"	1 TO 2
12"x18"	3
12"x24"	4"x9"
12"x36"	4"x12"

* IF LARGER SIZE REQUIRED, ENGINEER MUST DESIGN FOR OVERLAND FLOW.

City of Hemet
PUBLIC WORKS DEPARTMENT
ENGINEERING DIVISION
510 E. FLORIDA AVENUE
HEMET, CA 92543
(951) 765-2360

DRAINAGE INLET CONCRETE BOX WITH GRATE AND FRAME

JORGE L. BIAGIONI, PRINCIPAL ENGINEER R.C.E. 33751 — MAR 2011 DATE

REVISIONS
A MARCH 2011 REVISED DIMENSION

N:\ PW\4100\COH_STDS\REVISIONS\DRAINAGE\D-318.dwg N.Beltran 2011

1 OF 1 SHEETS

STANDARD NO. D-318

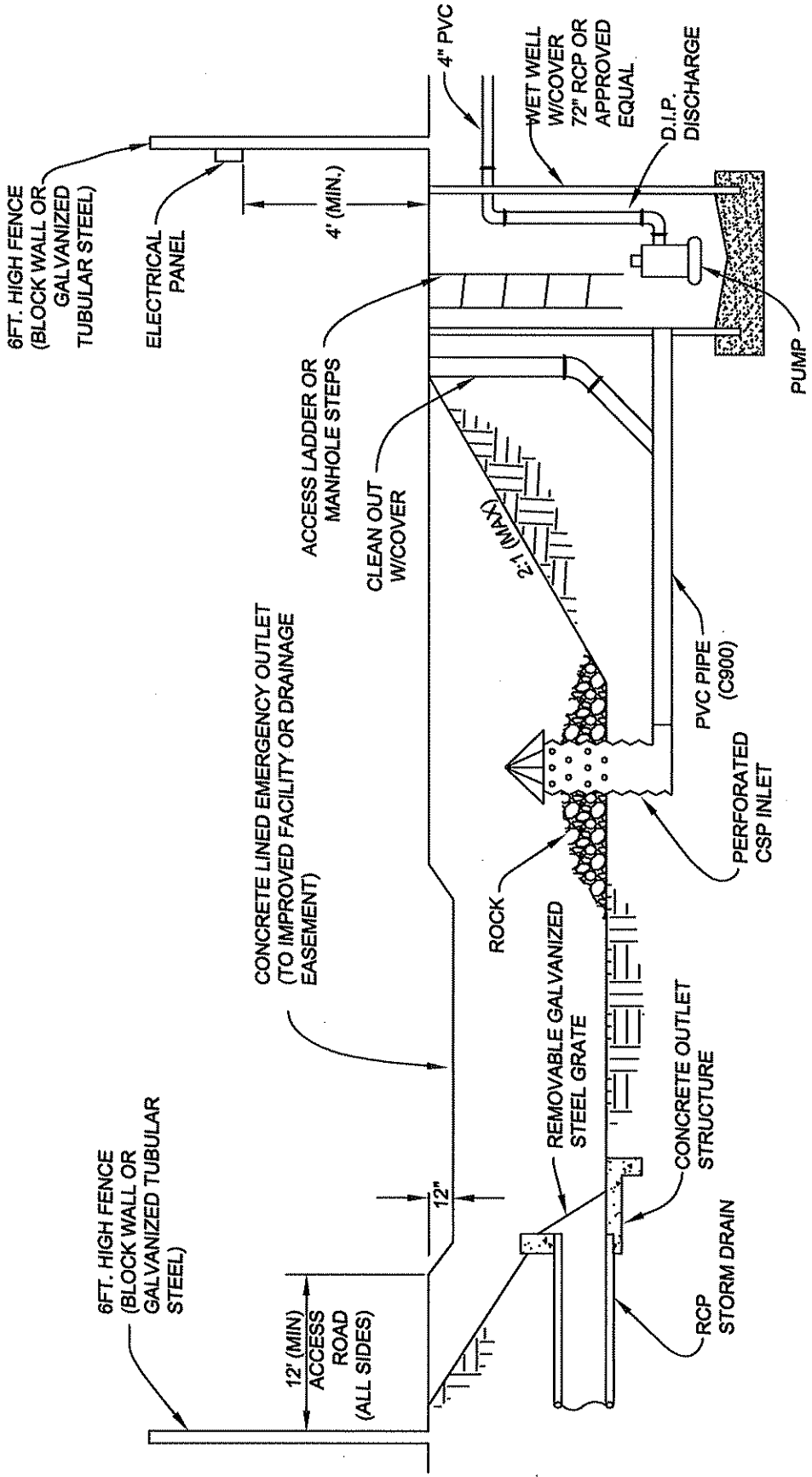

NOTE: DISCHARGE PIPE FROM PUMP STATION AND CLEAN OUT PIPE SHALL HAVE THE SAME DIAMETER

City of Hemet
PUBLIC WORKS DEPARTMENT
ENGINEERING DIVISION
510 E. FLORIDA AVENUE
HEMET, CA 92543
(951) 765-2360

DETENTION BASIN SCHEMATICS

JORGE L. BIACIONI, PRINCIPAL ENGINEER R.C.E. 33751

MAR 2011
DATE

REVISIONS

N:\ PW\4100\COH_STDS\REVISIONS\DRAINAGE\D-319.dwg N.Beltran 2011

1 OF 1 SHEETS

STANDARD NO. D-319